NOTES: UNLESS OTHERWISE SPECIFIED

1. ASSEMBLE IAW SAI-PROC-1229.

2 USE WITNESS HOLES IN MOLD (ITEM 1) TO ENSURE THAT EDGE OF PDA (ITEM 6) IS SEATED AGAINST EDGE OF CUTOUT ON REFERENCE SIDE OF MOLD (ITEM 1).

Released
MASTER DRAWING
REVISION BY
EO ONLY WHEN
RELEASED
SWALES FILE COPY
29-Aug-03

REVISION				
SYM	ZONE	DESCRIPTION	DATE	APPROVAL

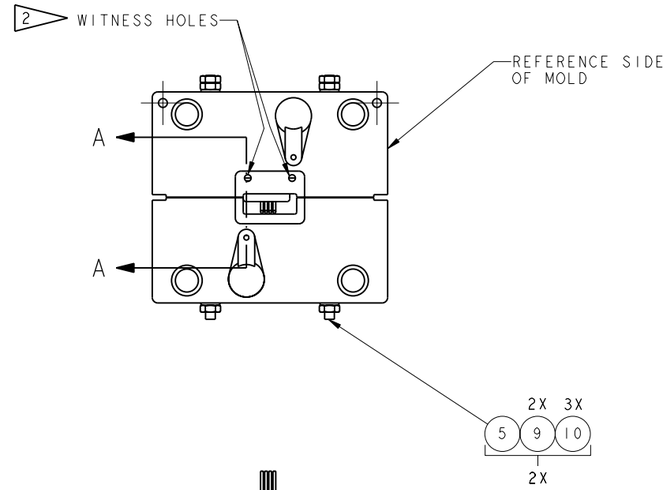

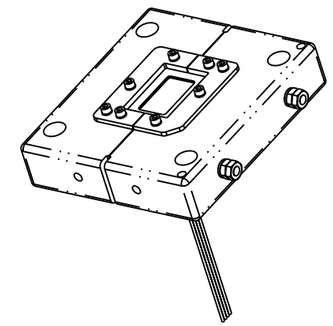

ISOMETRIC VIEW
FOR REFERENCE ONLY
NO SCALE

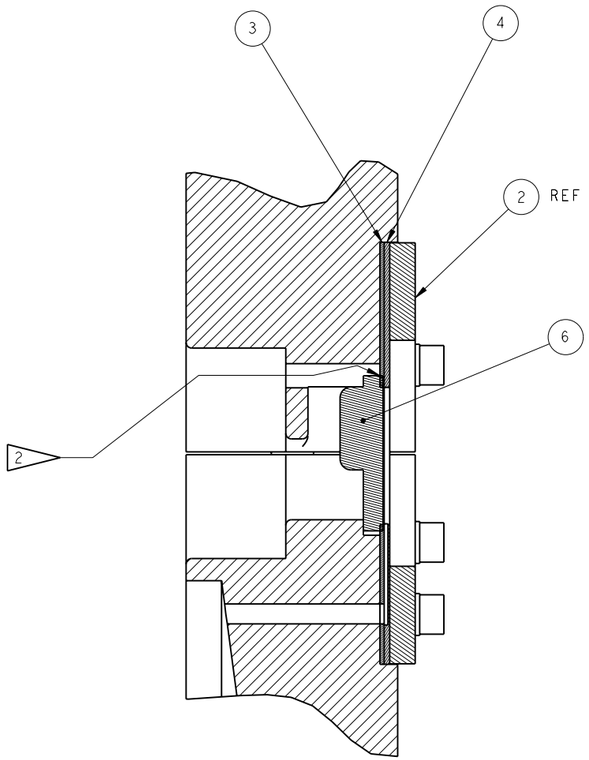

SECTION A-A
SCALE 4/1

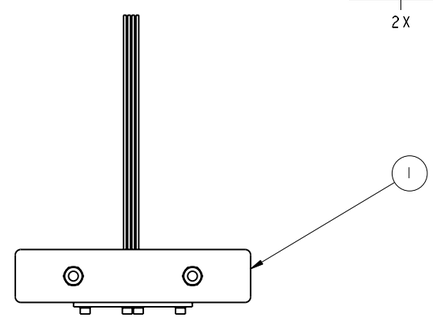

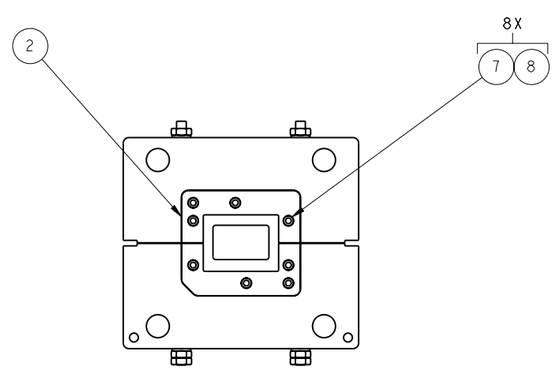

REQD	REQD	ITEM NO	PART NO.	DESCRIPTION	MATERIAL SPEC
	6	10	NAS671C6	NUT, .1380-32 UNJC-3B	CRES
	4	9	NAS620C6	WASHER, FLAT, #6	
	8	8	NAS620C2	WASHER, FLAT, #2	
	8	7	NAS1352C02-4	SCREW,CAP,SCH, .086-56UNRC X .250 LG	CRES
	1	6	LAT-DS-01237-03	ASSEMBLY, PHOTO DIODE (PDA)	
	2	5	C0520	PIN, MOLD ALIGNMENT	
	1	4	C0515	MASK, BONDING MOLD	
	1	3	C0514	SEAL, BONDING MOLD	
	1	2	C0513	CLAMP, MASK AND SEAL	
	1	1	C0512	MOLD, CDE	
	—	—	C0511	ASSEMBLY, MOLD/PDA	——

LIST OF MATERIAL

	NAME	INIT	DATE
DESIGNER	M. JOHNSON	MJ	8/27/03
DRAWN BY	M. JOHNSON	MJ	8/27/03
CHECKED	B. VYAS	BV	8/27/03
APPROVED-STRESS	-		
APPROVED-QA	J. LEE	JL	8/27/03
APPROVED-ENGINEER	T. LEE	TL	8/26/03
APPROVED	J. HAGGERTY	JH	8/26/03
APPROVED	M. KENNEDY	MK	8/27/03

UNLESS OTHERWISE SPECIFIED:
ALL DIMENSION ARE IN MILLIMETERS AND APPLY AFTER FINISH
DIMENSION TOLERANCES
0.X ±0.1 ANGLE±0.5°
X ±0.15
XX ±0.3
XXX ±0.8
XXXX ±1.5
125 ✓ FINISH IN MICROMETERS
INTERPRET DRAWING PER ANSI Y14.5M-1982
REMOVE ALL BURRS AND SHARP EDGES R0.25 OR CHAMFER MAX
MODEL NAME: C0511 -.11
DRW VERSION: -.4
PROVENGINEER VERSION:2001

SWALES AEROSPACE
5050 POWDER MILL ROAD
BELTSVILLE, MD 20705

TITLE
ASSEMBLY,
MOLD/PDA
GLAST CDE TOOLING

CAGE CODE		REV
D	C0511	-
8V543	SCALE: 1/1	WT APPROX: -

SH 1 OF 1

C0501	CDE FT
NEXT ASSY	USED ON

TASK NO: 00006.036

CM CLASSIFICATION
A

METRIC
HYBRID METRIC/INCH
THIRD ANGLE PROJECTION

R. MENCIA RM 8/28/03

FOLD LINE