LAT PROJECT DOCUMENT CHANGE NOTICE (DCN)

DCN No. LAT-XR-03705-01

SHEET 1 **OF** 1

ORIGINATOR:	Dave Tarkington	**PHONE:**	650-926-3791	**DATE:**	4/12/04
CHANGE TITLE:	DCN for LAT Electronics TEM			**ORG.:**	

DOCUMENT NUMBER	TITLE	NEW REV.
LAT-DS-00554	GLAST Electronics Boxes TEM Box Assy TEM Box Base	50
LAT-DS-0555	GLAST Electronics Boxes TEM Box Assy TEM Box Lid	50
LAT-DS-01026	GLAST Electronics Boxes TEM Box Assy TEM Connector Plate	51
LAT-DS-01031	GLAST Electronics Boxes TEM Box Assy TEM Connector Pin	50
LAT-DS-01481	GLAST Electronics Boxes DAQ Electronics TEM Box Assy	50

CHANGE DESCRIPTION (FROM/TO):

LAT-DS-01646-50 – GLAST Electronics Boxes TEM Circuit Card Assy
LAT-DS-01649-50 – GLAST Electronics Boxes DAQ Electronics Printed Wiring Board, TEM
LAT-DS-01650-50 – Schematic for the TEM
LAT-DS-02583-50 – Gerber File for the TEM
LAT-DS-02588-50 – GLAST Electronics Boxes Cable Assy TEM Input Power
LAT-DS-03582-50 – GLAST-Electronics Boxes Spacer, TEM Connector
LAT-TD-02230-50 – BOM for the TEM

Changes for these documents are referenced in LAT-XR-03706-01

REASON FOR CHANGE:

ACTION TAKEN: ☒ **Change(s) included in new release** ☐ **DCN attached to document(s), changes to be included in next revision**
☐ **Other (specify):**

DISPOSITION OF HARDWARE (IDENTIFY SERIAL NUMBERS):	DCN DISTRIBUTION:
☒ **No hardware affected (record change only)**	
☐ **List S/Ns which comply already:**	
☐ **List S/Ns to be reworked or scrapped:**	
☐ **List S/Ns to be built with this change:**	
☐ **List S/Ns to be retested per this change:**	
☐	

SAFETY, COST, SCHEDULE, REQUIREMENTS IMPACT? ☐ **YES** ☒ **NO**
If yes, CCB approval is required. Enter change request number:

APPROVALS	DATE	OTHER APPROVALS (specify):	DATE
ORIGINATOR: D. Tarkington (signature on file)	4/30/04	SE- P. Hascall (signature on file)	4/30/04
ORG. MANAGER: G. Haller (signature on file)	5/3/04	Chief Mechanical- M. Nordby (Black for Nordby)	4/30/04
PSA- Darren Marsh (signature on file)	4/30/04		
Manufacturing- Jerry Clinton (signature on file)	4/30/04		
Elec- D. Nelson (signature on file)	4/30/04		
DCC RELEASE: Natalie Cramar (signature on file)	5/3/04	Doc. Control Level: ☒ Subsystem ☐ LAT IPO ☐ GLAST Project	

REV	DESCRIPTION	DWN	CHKR	APVD	DATE
50	INITIAL FLIGHT RELEASE	DPT	AO	DN	04/04

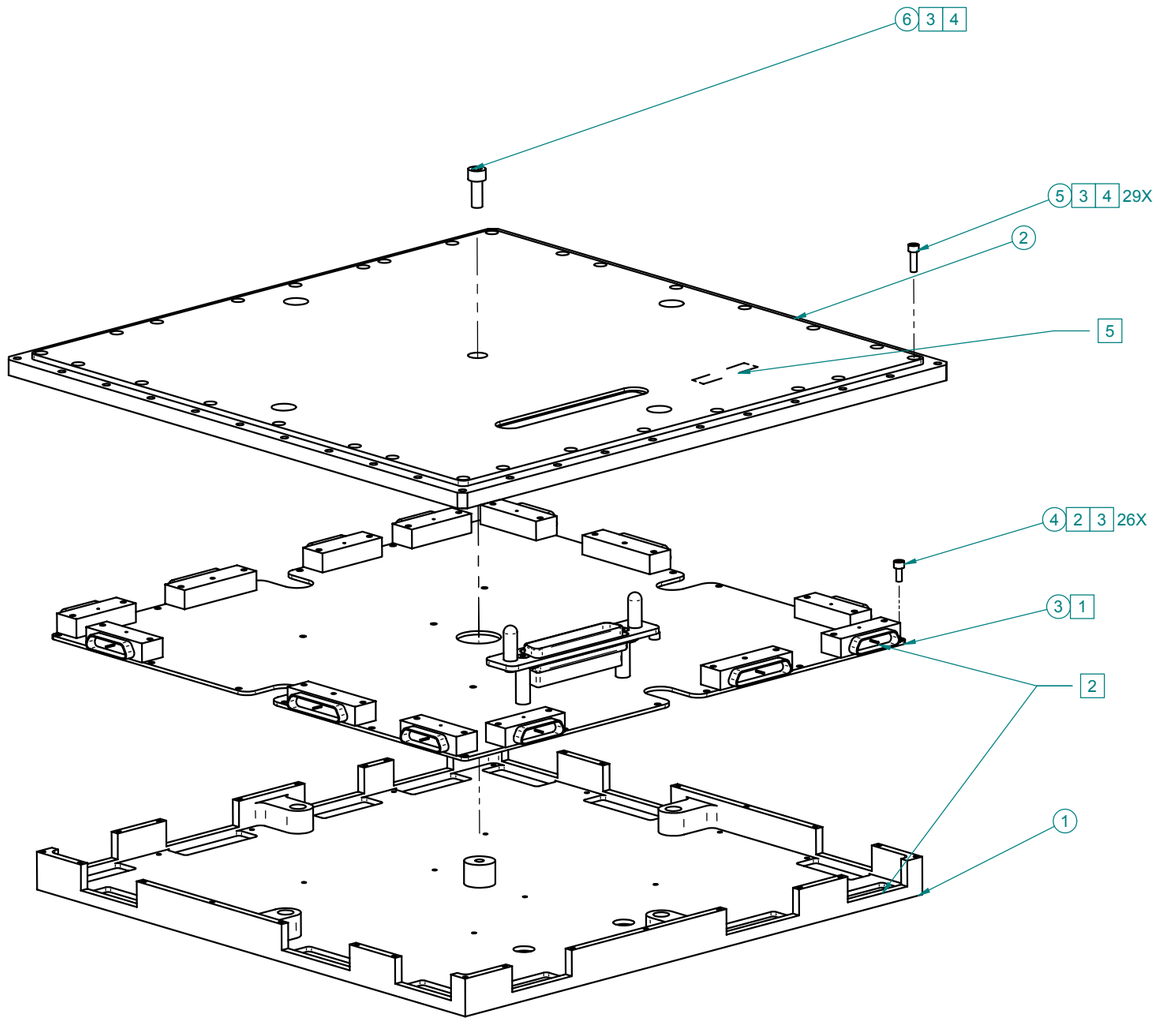

NOTES: UNLESS OTHERWISE SPECIFIED

1. APPLY THERMALLY CONDUCTIVE ADHESIVE, ITEM 7 TO BOTTOM SIDE OF CCA, ITEM 3, AS SHOWN ON SHEET 2, DETAIL A, PER LAT-PS-02615.
2. INSTALL BOARD IN CHASSIS BASE USING SCREWS, ITEM 4. APPLY TIGHTENING TORQUE OF 4.0 +/- 0.5 IN-LBS. TORQUE SEQUENCE ON SHEET 2, DETAIL B.
3. APPLY STAKING COMPOUND, ITEM 8, TO BOLT HEADS, IN ACCORDANCE WITH LAT-PS-02615.
4. INSTALL LID, ITEM 2, USING SCREWS, ITEMS 5 AND 6. APPLY TIGHTENING TORQUE OF 5.7 +/- 0.5 IN-LBS TO ITEM 5 AND 33.0 +0/-3.0 IN-LBS. TO ITEM 6. TORQUE SEQUENCE ON SHEET 2, DETAIL C.
5. MARK WITH PART NUMBER AND SERIAL NUMBER USING ITEM 9 IN APPROXIMATE AREA SHOWN.

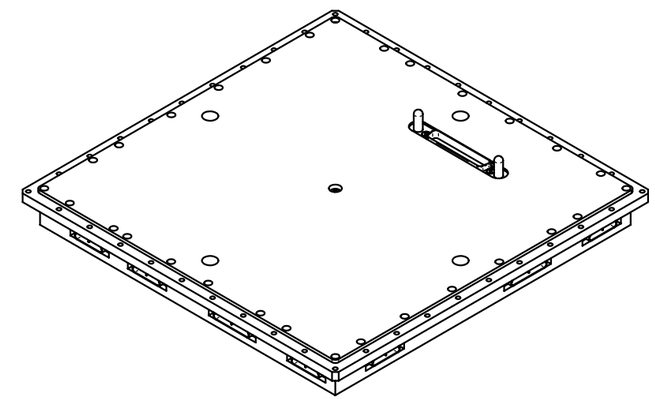

ITEM	STOCK OR PART NO	TITLE OR DESCRIPTION	QTY
9*	CAT-L-INK	INK, DEXTER HYSOL, 100/6 BW WHITE	AR
8*	HYSOL 0151	ADHESIVE, EPOXY, HYSOL_0151	AR
7*	CV-2946	ADHESIVE, THERMAL, NUSIL_CV-2946	AR
6	NAS1352N3-8	#10-24 UNC-3A X .5,SCREW, HEX SCH CAP, SST	1
5	NAS1352N04-6	#4-40 UNC-3A X 0.375 SCREW, HEX SCH CAP, SST	29
4	NAS1352N03LB4	#3-48 UNF-3A X .25,SCREW, HEX SCH CAP, SST	26
3	LAT-DS-01646	TEM CIRCUIT CARD ASSY	1
2	LAT-DS-00555	TEM BOX LID	1
1	LAT-DS-00554	TEM BOX BASE	1

APPROVED - 5/3/04
LAT-XR-03705-01

LAT-DS-01643
NEXT ASSEMBLIES:

DIMENSIONING AND TOLERANCING IS IN ACCORDANCE WITH ASME Y14.5M-1994.

UNLESS OTHERWISE SPECIFIED
DIMENSIONS ARE IN INCHES.
TOLERANCES:
BREAK EDGES .005-.015
INTERNAL CORNERS R.015 MAX
FRACTIONS ±---
DEC .XX±---
.XXX±---
.XXXX±---
ANGLE ±---
ALL SURF ---

SCALE: 1:2

DO NOT SCALE DRAWING

CAD FILE NAME: LAT-DS-01481-01.dft

STANFORD LINEAR ACCELERATOR CENTER
U.S. DEPARTMENT OF ENERGY
STANFORD UNIVERSITY STANFORD, CALIFORNIA

PROPRIETARY DATA OF STANFORD UNIVERSITY AND/OR U. S. DEPARTMENT OF ENERGY. RECIPIENT SHALL NOT PUBLISH THE INFORMATION WITHIN UNLESS GRANTED SPECIFIC PERMISSION OF STANFORD UNIVERSITY.

	DATE	APPROVALS
ENGR D. NELSON		D. NELSON
DWN D.TARKINGTON		---
CHKR M. CAMPELL		---

GLAST ELECTRONICS BOXES DAQ ELECTRONIC TEM BOX ASSY

DRAWING NUMBER LAT-DS-01481
REVISION NUMBER 50
D
SH 1 OF 2

GLAST E-BOX TEM BOX ASSY

SLAC FORMAT V2.0

REV	DESCRIPTION	DWN	CHKR	APVD	DATE
D	LAT-DS-01481 03				

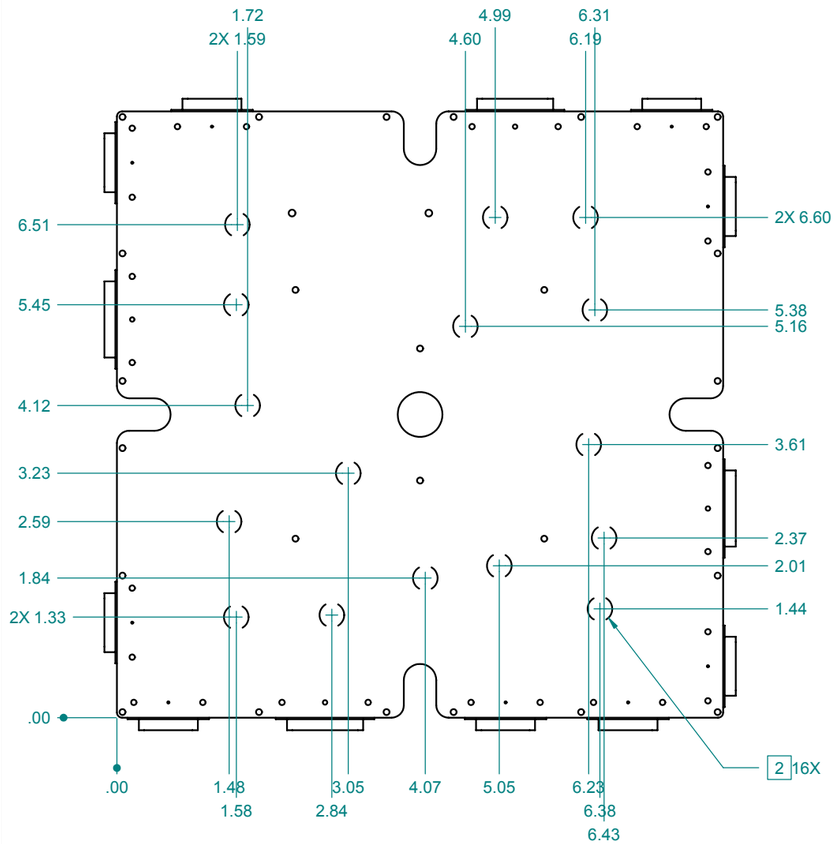

DETAIL A

SEE NOTE 1 ON SHEET 1 OF DRAWING.
THERMAL ADHESIVE APPLICATION AREAS ON BACKSIDE OF CCA SHOWN.
APPLY ADHESIVE IN 0.25 IN. DROPLET SIZE ONLY IN AREAS SHOWN

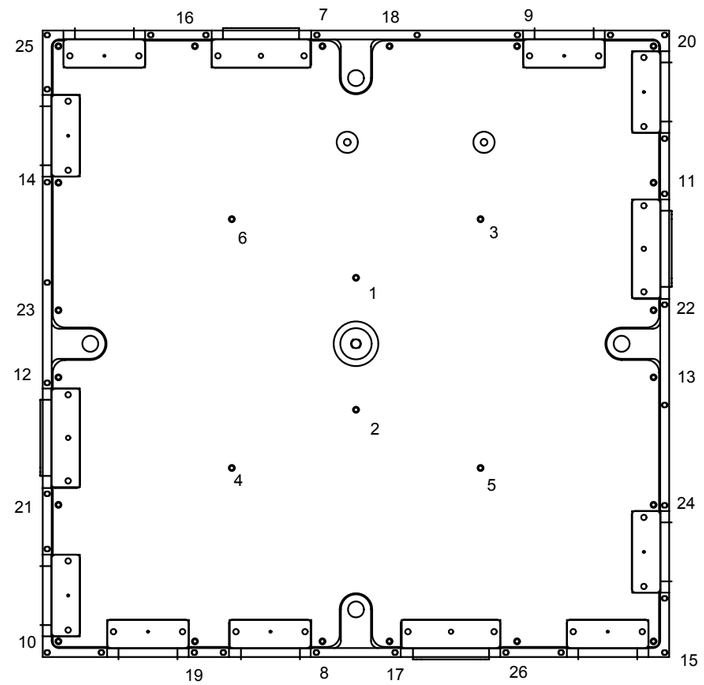

DETAIL B

TORQUE SEQUENCE FOR CCA, ITEM 3, MOUNT FASTENERS, ITEM 4.
SEE NOTE 2 ON SHEET 1 OF DRAWING.

REPEAT SEQUENCE 2X

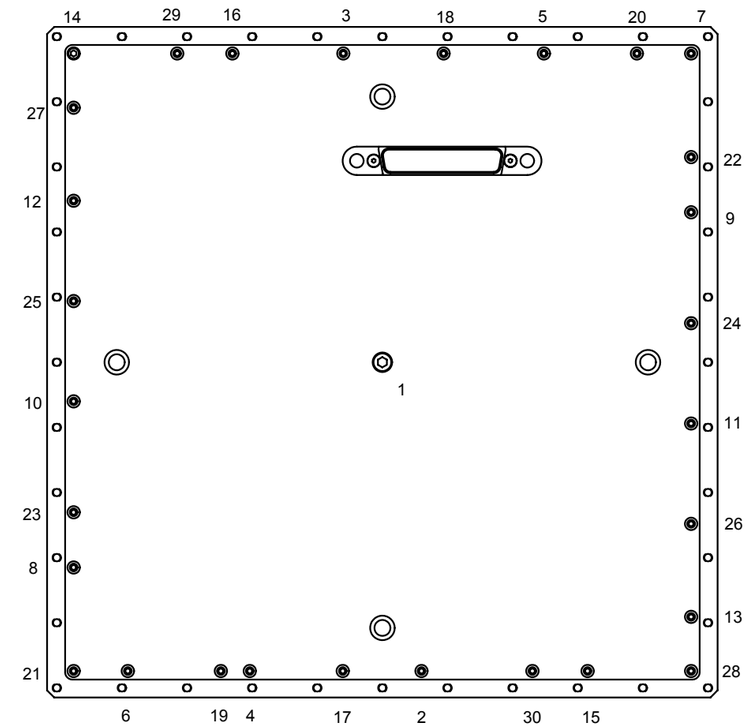

DETAIL C

TORQUE SEQUENCE FOR LID, ITEM 2, FASTENERS, ITEMS 5 & 6.
SEE NOTE 4 ON SHEET 1 OF DRAWING.

REPEAT SEQUENCE 2X

NEXT ASSEMBLIES:

DIMENSIONING AND TOLERANCING IS IN ACCORDANCE WITH ASME Y14.5M-1994.

UNLESS OTHERWISE SPECIFIED
DIMENSIONS ARE IN INCHES.
TOLERANCES:
BREAK EDGES .005-.015
INTERNAL CORNERS R.015 MAX
FRACTIONS ± ---
DEC .XX ± .01
.XXX ± .005
.XXXX ± ---
ANGLE ± .5°
ALL SURF 63

SCALE: 1:1
DO NOT SCALE DRAWING
CAD FILE NAME: LAT-DS-01481-02.dft

STANFORD LINEAR ACCELERATOR CENTER
U.S. DEPARTMENT OF ENERGY
STANFORD UNIVERSITY STANFORD, CALIFORNIA

PROPRIETARY DATA OF STANFORD UNIVERSITY AND/OR U. S. DEPARTMENT OF ENERGY. RECIPIENT SHALL NOT PUBLISH THE INFORMATION WITHIN UNLESS GRANTED SPECIFIC PERMISSION OF STANFORD UNIVERSITY.

		DATE	APPROVALS
ENGR	D.TARKINGTON		DAVE NELSON
DWN	D.TARKINGTON		---
CHKR	---		---

GLAST
ELECTRONICS BOXES
DAQ ELECTRONICS
TEM BOX ASSY

DRAWING NUMBER LAT-DS-01481
REVISION NUMBER 50
D
SH 2 OF 2

LLAC FORMAT V2.0