REVISION				
SYM	ZONE	DESCRIPTION	DATE	APPROVAL

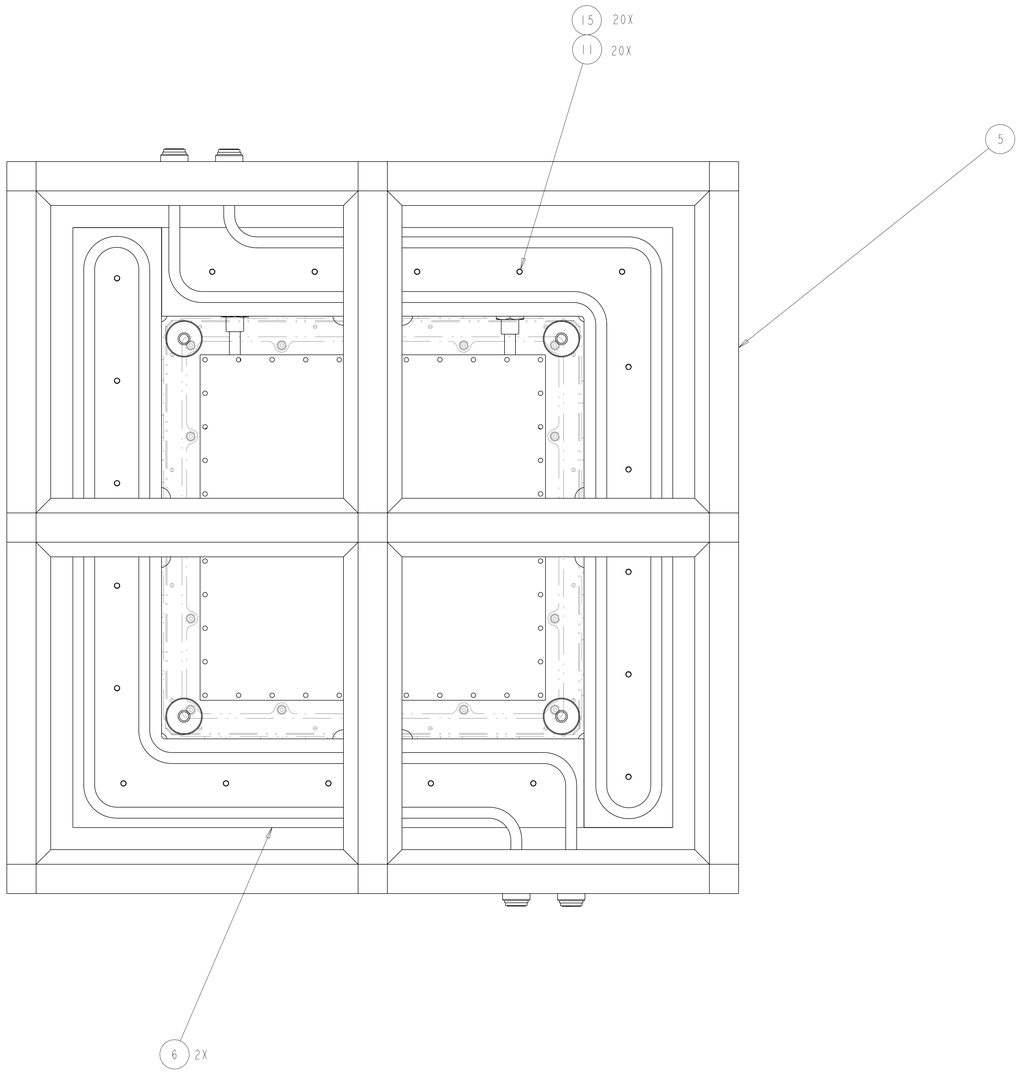

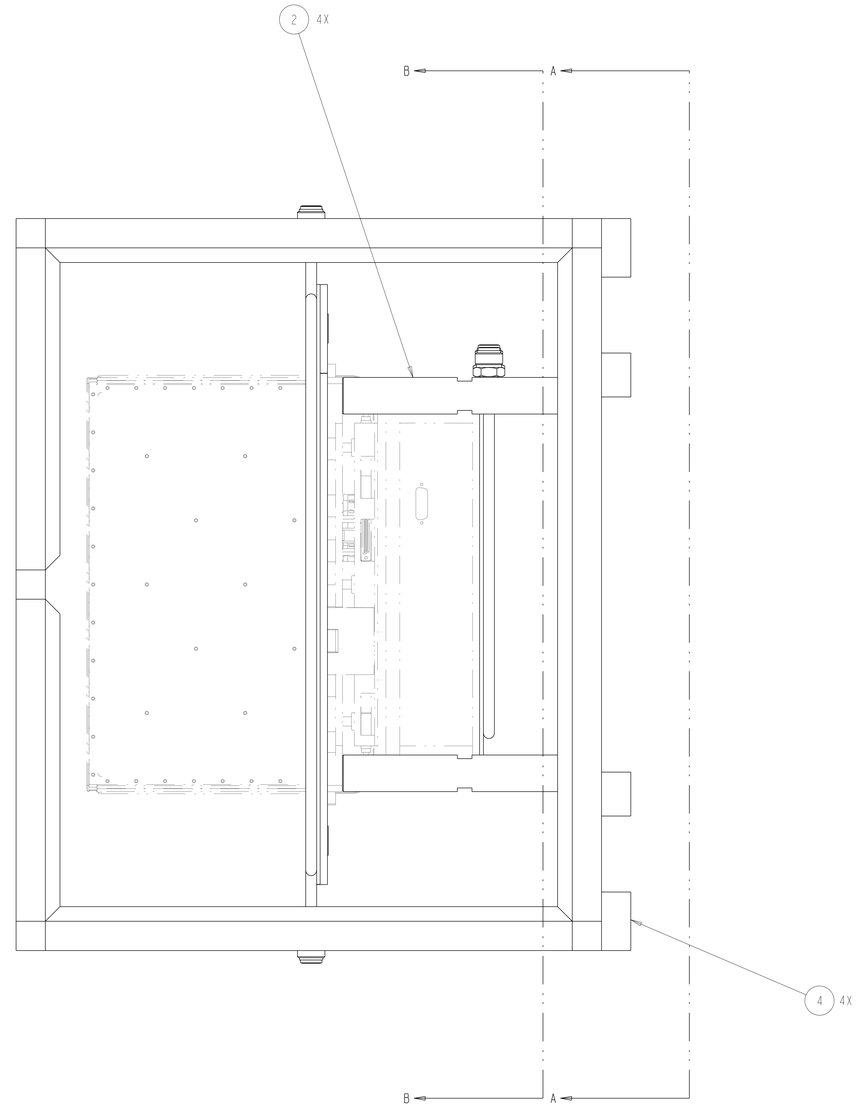

REQD	REQD	ITEM NO	PART NO.	DESCRIPTION	MATERIAL SPEC
	AR	17		ADHESIVE	
	4	16	NAS1149C0563R	WASHER, FLAT, 5/16	
	60	15	NAS620C8	WASHER, FLAT, #8	
	16	14	NAS620C6	WASHER, FLAT, #6	
	4	13	NAS1352C5-12	SCREW, CAP, .312-18 X .75 L	
	40	12	NAS1352C08-8	SCREW, CAP, .164-32 X .50 L	
	20	11	NAS1352C08-6	SCREW, CAP, .164-32 X .38 L	
	16	10	NAS1352C06-8	SCREW, CAP, .138-32 X .50 L	
	8	9	90145A473	PIN	McMASTER-CARR
	6	8	HK5334R38	STRIP HEATER	MINCO
	1	7	LAT-DS-03846	COOLING TUBE ASSY, TPS	
	2	6	LAT-DS-03845	COOLING TUBE ASSY, CALORIMETER	
	1	5	LAT-DS-03813	BLANKET FRAME	
	4	4	LAT-DS-03812	ISOLATOR, BLANKET FRAME	
	4	3	LAT-DS-03811	ISOLATOR, CALORIMETER	
	4	2	LAT-DS-03810	POST	
	4	1	LAT-DS-03805	PLATE, BASE	
	AR	—	——	TVAC TEST FIXTURE ASSY	

LIST OF MATERIAL

FOLD LINE

MASTER DRAWING
GLAST-CAL CM FILE COPY

RELEASED FOR MANUFACTURE
31 August 2004

	NAME	INIT	DATE
DESIGNER	K. Wolko	KW	8-31-04
DRAWN BY	K. Wolko	KW	8-31-04
CHECKED	P. Dizon	PVD	8-31-04
APPROVED-STRESS			
APPROVED-QA	J. Lee	JL	8-31-04
APPROVED-ENGINEER	P. Dizon	PVD	8-31-04
APPROVED	B. Raynor	WCR	8-31-04
APPROVED			

UNLESS OTHERWISE SPECIFIED: ALL DIMENSION ARE IN INCHES AND APPLY AFTER FINISH
DIMENSION TOLERANCES
.XX: ±0.01
.XXX: ±0.001
ANGLE: ±0.5°
FRACTIONS: ±1/16
√
INTERPRET DRAWING PER ANSI Y14.5M-1982
REMOVE ALL BURRS AND SHARP EDGES R.010 OR CHAMFER MAX
MODEL NAME: LAT-DS-04669 .
DRW VERSION:
PROVENGINEER VERSION:2001

GLAST
SPACE SCIENCES DIVISION
NAVAL RESEARCH LABORATORY
WASHINGTON, DC

TITLE
TEST FIXTURE ASSY, TVAC GLAST

CM CLASSIFICATION
METRIC
HYBRID METRIC/INCH
THIRD ANGLE PROJECTION
GLAST
NEXT ASSY
USED ON
TASK NO:

CAGE CODE: E
LAT-DS-04669
REV 01
SCALE: 0.500
WT APPROX:
SHT 1 OF 2

REVISION				
SYM	ZONE	DESCRIPTION	DATE	APPROVAL

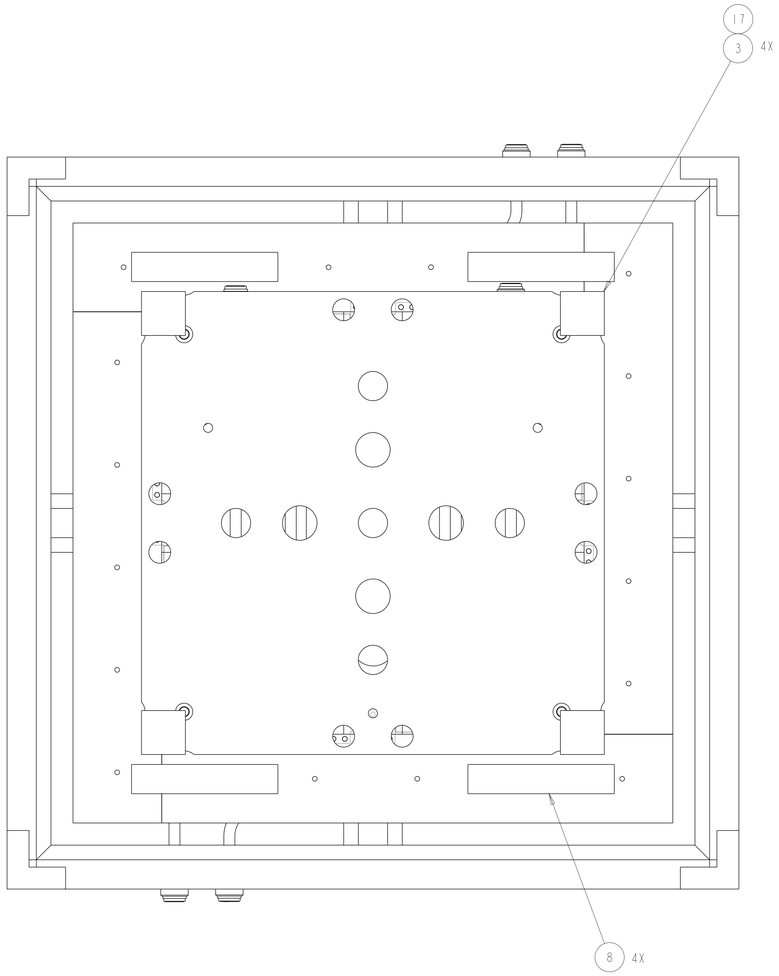

VIEW A-A

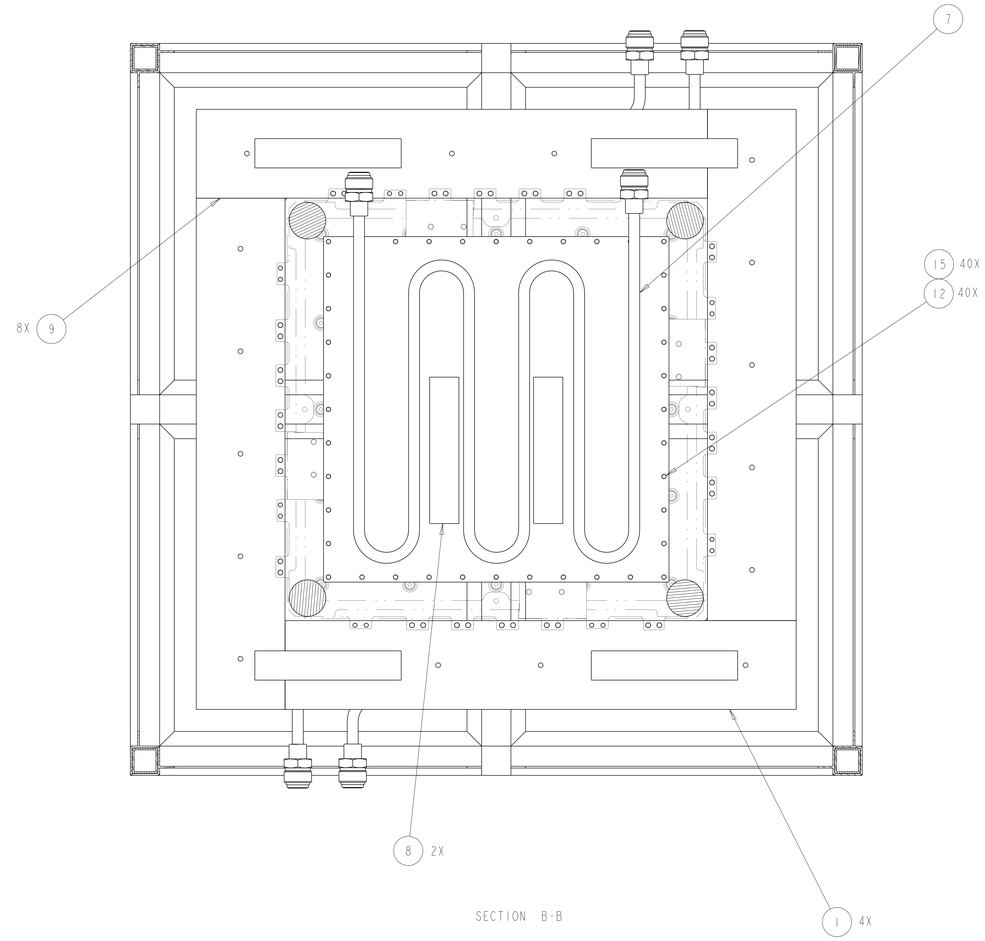

SECTION B-B

MASTER DRAWING

GLAST-CAL CM FILE COPY

RELEASED FOR MANUFACTURE

31 August 2004

NAME	INIT	DATE	CAGE CODE	LAT-DS-04669	REV 01
CHECKED P. Dizon	PVD	8-31-04		SCALE 0.500	WT	SH 2 OF 2
APPROVED-ENGR P. Dizon	PVD	8-31-04	FILE NAME: LAT-DS-04669 .	MODEL NAME: LAT-DS-04669 .	