REVISION				
SYM	ZONE	DESCRIPTION	DATE	APPROVAL

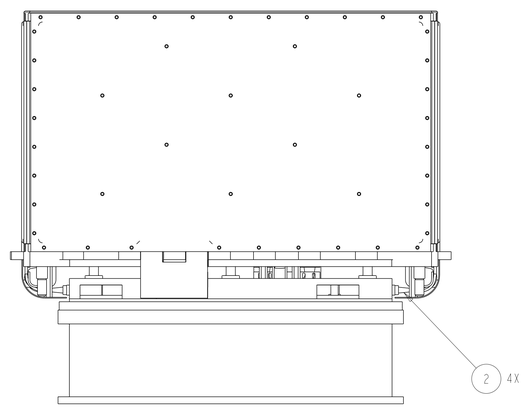

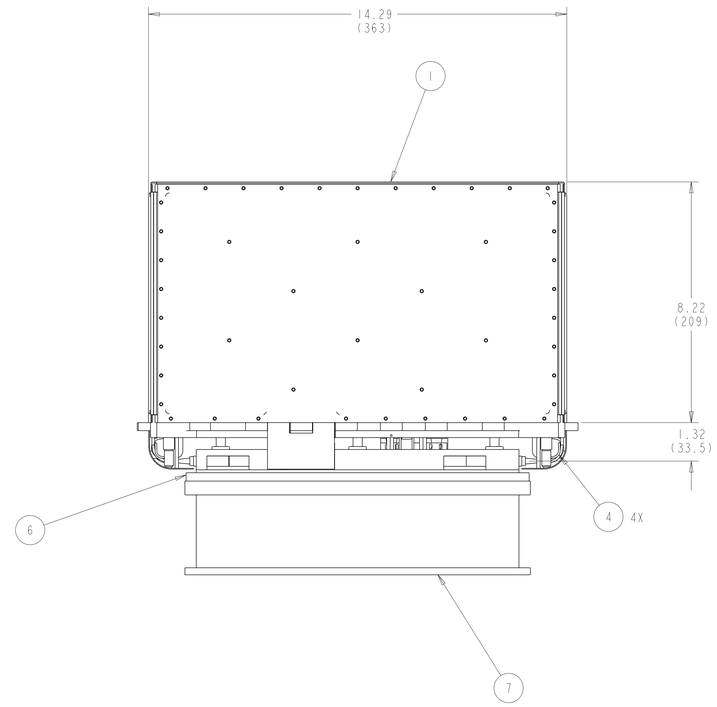

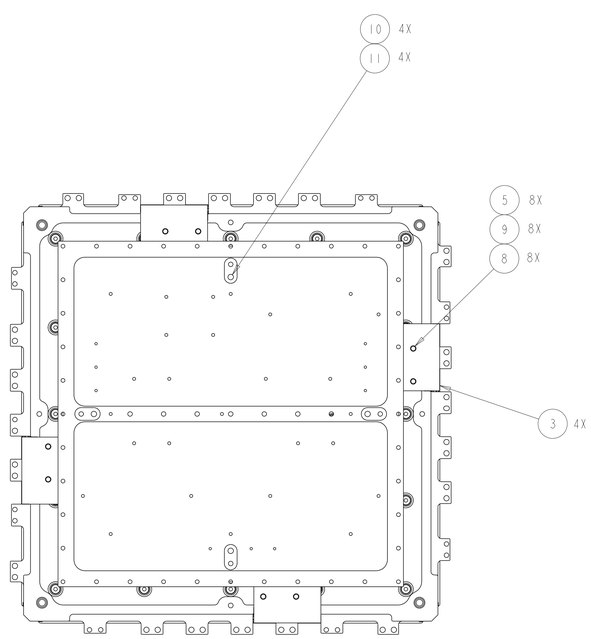

RELEASED FOR MANUFACTURE
31 AUGUST 2004

MASTER DRAWING
GLAST-CAL CM FILE COPY

REQD	REQD	NO	ITEM PART NO.	DESCRIPTION	MATERIAL SPEC
	4	11		WASHER, FLAT, M6	
	4	10	AIC 3353	SCREW, CAP, M6 X 1, 30MM L	AIR INDUSTRIES CORP
	8	9	722-95-029-040-0.4B	WASHER, FLAT, M4	
	8	8	NA0019-04008	SCREW, CAP, MJ4X.7 X 8 MM LG	
	1	7	LAT-DS-01482	TPS MODULE	
	1	6	LAT-DS-01481	TEM MODULE	
	8	5	19981-SS-0470	STANDOFF	AMATOM
	4	4	LAT-DS-03848	SUPPORT ASSY, AFEE CABLE	
	4	3	LAT-DS-03844	SHIELD, HARNESS	
	4	2	LAT-DS-01496	CABLE ASSY, AFEE TO TEM	
	1	1	LAT-DS-00916	CALORIMETER MODULE	
	AR	—	———	TOWER MODULE	

LIST OF MATERIAL

	NAME	INIT	DATE
DESIGNER	K. Wolko	KW	8-30-04
DRAWN BY	K. Wolko	KW	8-30-04
CHECKED	P. Dizon	PVD	8-30-04
APPROVED-STRESS		PVD	8-30-04
APPROVED-QA	J. Lee	JWL	8-31-04
APPROVED-ENGINEER	P. Dizon	PVD	8-30-04
APPROVED	B. Raynor	WCR	8-31-04
APPROVED			

UNLESS OTHERWISE SPECIFIED: ALL DIMENSION ARE IN INCHES AND APPLY AFTER FINISH
DIMENSION TOLERANCES
.XX: ±0.02
.XXX: ±0.005
ANGLE: ±0.5°
FRACTIONS: ±1/16

INTERPRET DRAWING PER ANSI Y14.5M-1982
REMOVE ALL BURRS AND SHARP EDGES R.010 OR CHAMFER MAX

MODEL NAME: CALORIMETER.ASM.03310
DRW VERSION:
PROVENGINEER VERSION:2001

GLAST
SPACE SCIENCES DIVISION
NAVAL RESEARCH LABORATORY
WASHINGTON, DC

TITLE
TOWER MODULE, CALORIMETER GLAST

CAGE CODE: E
LAT-DS-04536
REV 01
SCALE: 0.500
WT APPROX.
SH 1 OF 1

METRIC
X HYBRID METRIC/INCH
THIRD ANGLE PROJECTION
CM CLASSIFICATION
NEXT ASSY
USED ON GLAST
TASK NO: