REVISION				
SYM	ZONE	DESCRIPTION	DATE	APPROVAL

NOTES: UNLESS OTHERWISE SPECIFIED

1. SOURCE OF SUPPLY:
   McMASTER-CARR SUPPLY COMPANY
   P.O. BOX 440
   NEW BRUNSWICK, NJ 08903-0440

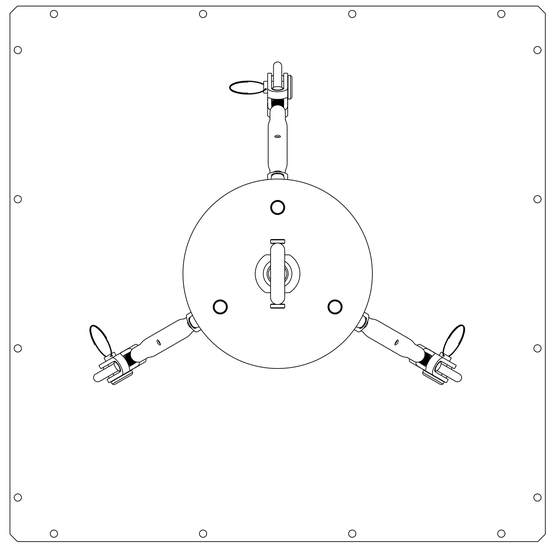

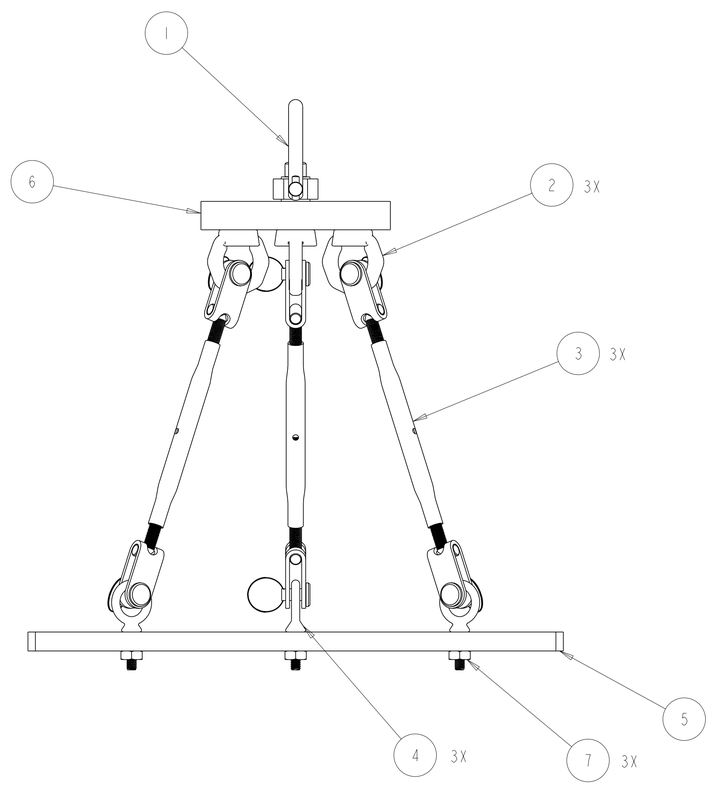

RELEASED FOR MANUFACTURE
5 AUG 2004

MASTER DRAWING
GLAST-CAL CM FILE COPY

REQD	REQD	ITEM NO	PART NO.	DESCRIPTION	MATERIAL SPEC
	3	7	MS35649-3314	NUT, 5/16-18,	SEE NOTE 1
	1	6	LAT-DS-04140	HOIST COUPLER, LIFT FIXTURE ASSY	SEE NOTE 1
	1	5	LAT-DS-02795	HOIST PLATE, CALORIMETER	SEE NOTE 1
	3	4	33045T78	EYEBOLT,	SEE NOTE 1 SEE NOTE 1
	3	3	3082T33	TURNBUCKLE ASSEMBLY,	SEE NOTE 1 SEE NOTE 1
	3	2	3059T69	SWIVEL EYE BOLT,	SEE NOTE 1 SEE NOTE 1
	1	1	2949T32	HOIST RING,	SEE NOTE 1 SEE NOTE 1
		—	LAT-DS-04138	LIFTING FIXTURE ASSY, CALORIMETER	——

LIST OF MATERIAL

	NAME	INIT	DATE
DESIGNER	K. Wolko	KW	7-29-04
DRAWN BY	K. Wolko	KW	7-29-04
CHECKED	P. Dizon	PVD	8-5-04
APPROVED-STRESS	P. Dizon	PVD	8-5-04
APPROVED-QA	J. Lee	JWL	8-5-04
APPROVED-ENGINEER	P. Dizon	PVD	8-5-04
APPROVED	B. Raynor	WCR	8-5-04
APPROVED			

UNLESS OTHERWISE SPECIFIED: ALL DIMENSION ARE IN INCHES AND APPLY AFTER FINISH
DIMENSION TOLERANCES
.XX: ±0.01
.XXX: ±0.001
ANGLE: ±0.5°
FRACTIONS: ±1/16

INTERPRET DRAWING PER ANSI Y14.5M-1982
REMOVE ALL BURRS AND SHARP EDGES R.010 OR CHAMFER MAX

MODEL NAME: LAT-DS-04138 .
DRW VERSION:
PRO/ENGINEER VERSION:2001

GLAST
SPACE SCIENCES DIVISION
NAVAL RESEARCH LABORATORY
WASHINGTON, DC

TITLE
LIFTING FIXTURE ASSY, CALORIMETER GLAST

CAGE CODE: D
LAT-DS-04138
REV 01
SCALE: 0.500
WT APPROX:
SH 1 OF 1

METRIC
HYBRID METRIC/INCH
THIRD ANGLE PROJECTION

CM CLASSIFICATION
NEXT ASSY
USED ON GLAST
TASK NO: