REVISION				
SYM	ZONE	DESCRIPTION	DATE	APPROVAL

MASTER DRAWING

GLAST-CAL CM FILE COPY

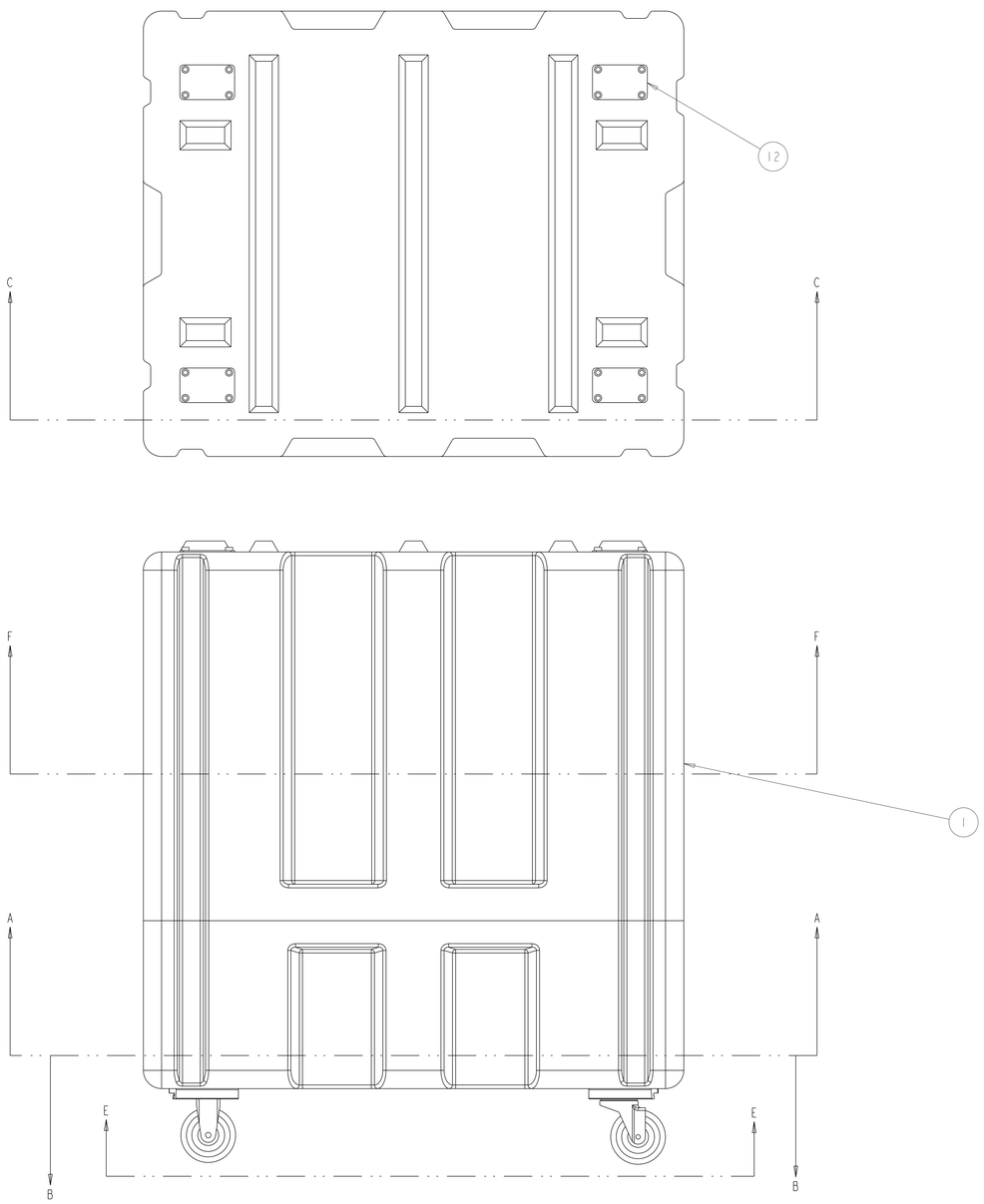

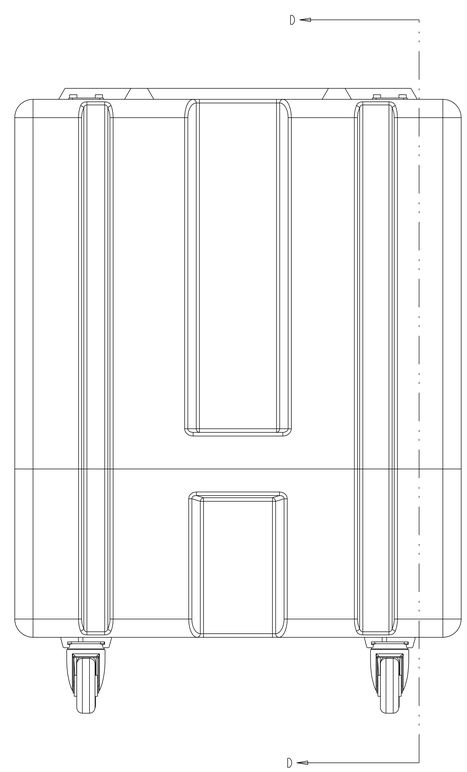

RELEASED FOR MANUFACTURE

22 APRIL 2004

REQD	REQD	ITEM NO.	PART NO.	DESCRIPTION	MATERIAL SPEC
	4	30	LAT-DS-03394	SUPPORT ASSEMBLY	
	4	29	94495A223	SETSCREW, .164-32 X .38 L	McMASTER-CARR
	AR	28	6802 K22	TEFLON TAPE	McMASTER-CARR
	AR	27	EA 9394NA	ADHESIVE,	
	84	26	92200A194	SCREW, CAP, .164-32 X .50 L	McMASTER-CARR
	84	25	90945A726	WASHER, FLAT, #8	McMASTER-CARR
	10	24	91771A540	SCREW, FLAT HEAD, .250-20 X .75 L	McMASTER-CARR
	10	23	92200A541	SCREW, CAP, .250-20 X .88 L	McMASTER-CARR
	10	22	91475A029	WASHER, SPLIT LOCK, .250	McMASTER-CARR
	10	21	90945A761	WASHER, FLAT, .250	McMASTER-CARR
	12	20	98019A399	WASHER, FLAT, .38	McMASTER-CARR
	12	19	92200A704	SCREW, CAP, .375-24 X .75 L	McMASTER-CARR
	1	18	98380A540	PIN, Ø.250 X .75 L	McMASTER-CARR
	1	17	98380A508	PIN, Ø.188 X .75 L	McMASTER-CARR
	1	16	ZSP 6-037-4	RELIEF VALVE	ZERO
	1	15	SS-4P4T1	PLUG VALVE	NUPRO
	3	14	2994T59	HOIST RING	McMASTER-CARR
	20	13	CL-150-VTC	TOGGLE CLAMP	CARR-LANE
	2	12	OCLHD-3056-91-CP	CASTER AND PAD KIT	SEE NOTE 1
	5	11	WR6-400-10-E	ISOLATOR, WIRE ROPE	
	4	10	LAT-DS-03393	BUSHING, PILLOW BLOCK	
	2	9	LAT-DS-03392	PILLOW BLOCK	
	2	8	LAT-DS-03391	PIN, ALIGNMENT	
	1	7	LAT-DS-03388	MANIFOLD ASSEMBLY	
	1	6	LAT-DS-03387	SEAL, O-RING, ENCLOSURE	
	20	5	LAT-DS-03386	SPACER, TOGGLE CLAMP	
	1	4	LAT-DS-03382	ENCLOSURE, CALORIMETER	
	1	3	LAT-DS-03381	PLATE, ENCLOSURE SEAL	
	1	2	LAT-DS-03380	PLATE, BASE	
	1	1	LAT-DS-03379	MODIFICATION, SHIPPING CONTAINER	
	—		——	SHIPPING CONTAINER ASSEMBLY	

LIST OF MATERIAL

	NAME	INIT	DATE
DESIGNER	K. Wolko	KW	4/22/04
DRAWN BY	K. Wolko	KW	4/22/04
CHECKED	P. Dizon	PVD	4/22/04
APPROVED-STRESS			
APPROVED-QA	J. Lee	JWL	4/22/04
APPROVED-ENGINEER	P. Dizon	PVD	4/22/04
APPROVED	B. Raynor	WCR	4/22/04
APPROVED			

UNLESS OTHERWISE SPECIFIED: ALL DIMENSION ARE IN INCHES AND APPLY AFTER FINISH

DIMENSION TOLERANCES
.XX: ±0.02
.XXX: ±0.010
ANGLE: ±0.5°
FRACTIONS: ±1/16

INTERPRET DRAWING PER ANSI Y14.5M-1982
REMOVE ALL BURRS AND SHARP EDGES R.010 OR CHAMFER MAX

MODEL NAME: LAT-DS-03395
DWG VERSION:
PRO/ENGINEER VERSION:2001

GLAST

SPACE SCIENCES DIVISION
NAVAL RESEARCH LABORATORY
WASHINGTON, DC

TITLE
SHIPPING CONTAINER, GLAST CALORIMETER GLAST

CAGE CODE: E
LAT-DS-03395
REV

SCALE: 0.250 | WT APPROX: | SH 1 OF 3

METRIC
HYBRID METRIC//INCH
THIRD ANGLE PROJECTION

GLAST
USED ON
NEXT ASSY

CM CLASSIFICATION

TASK NO:

REVISION				
SYM	ZONE	DESCRIPTION	DATE	APPROVAL

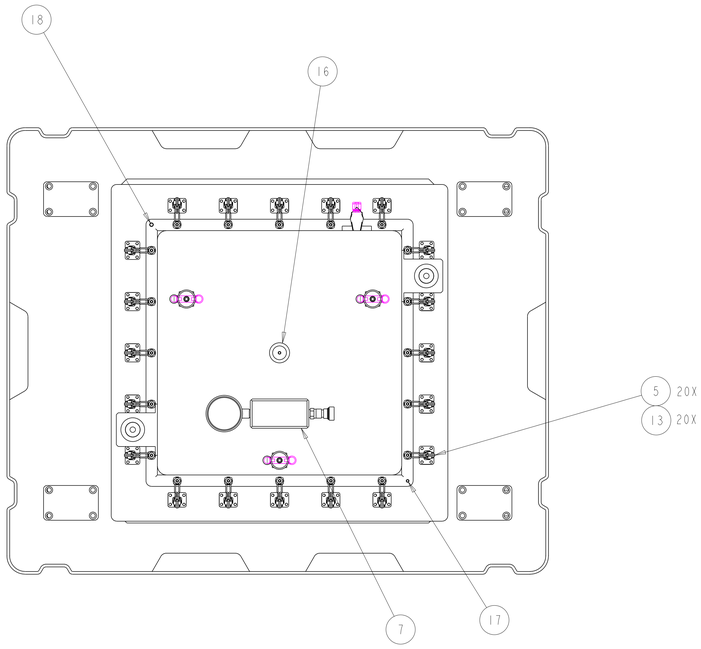

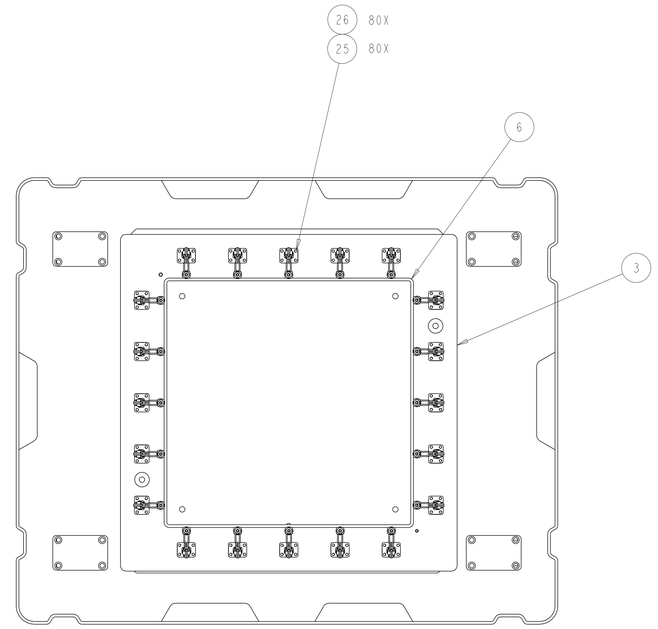

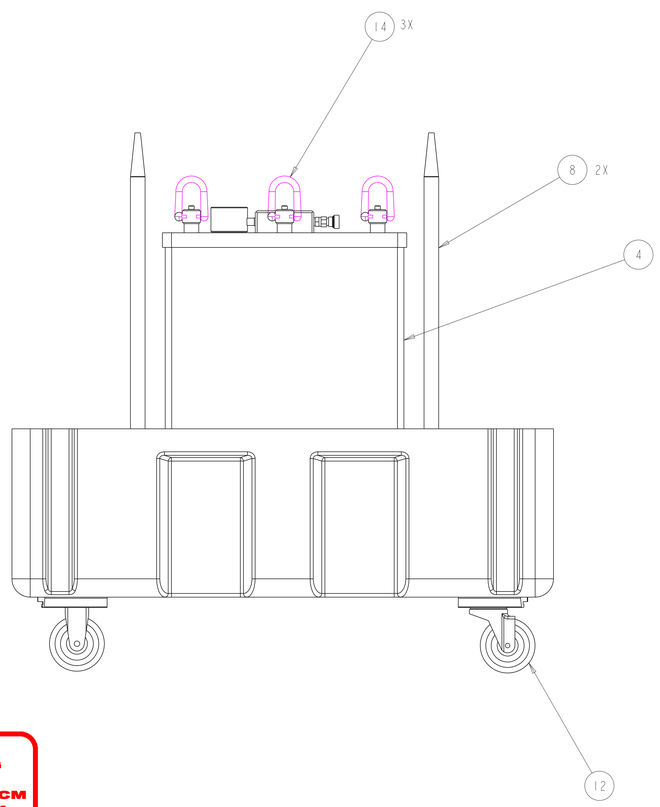

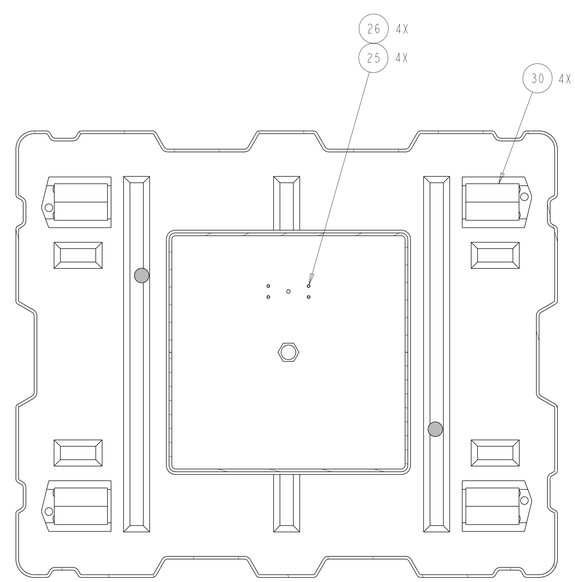

SECTION F-F

MASTER DRAWING

GLAST-CAL CM FILE COPY

RELEASED FOR MANUFACTURE

22 APRIL 2004

NAME	INIT	DATE	CAGE CODE	LAT-DS-03395	REV
CHECKED P. Dizon	PVD	4/22/04		SCALE 0.250	WT	SH 2 OF 3
APPROVED-ENGR P. Dizon	PVD	4/22/04	FILE NAME: LAT-DS-03395 .	MODEL NAME: LAT-DS-03395 .	

REVISION				
SYM	ZONE	DESCRIPTION	DATE	APPROVAL

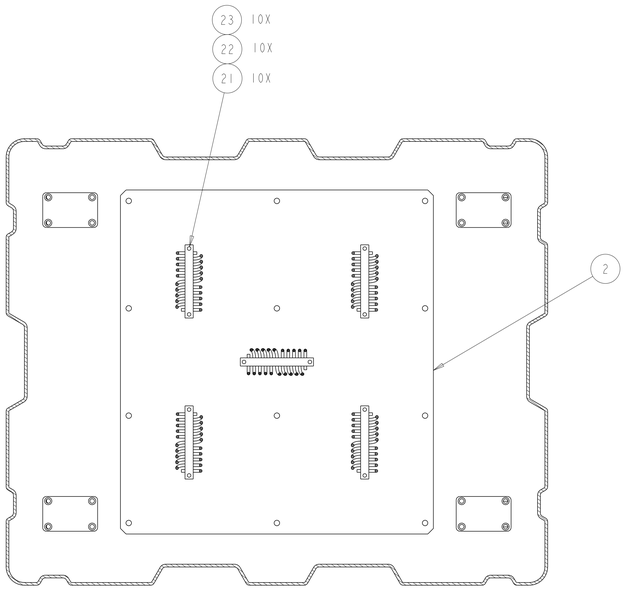

SECTION B-B

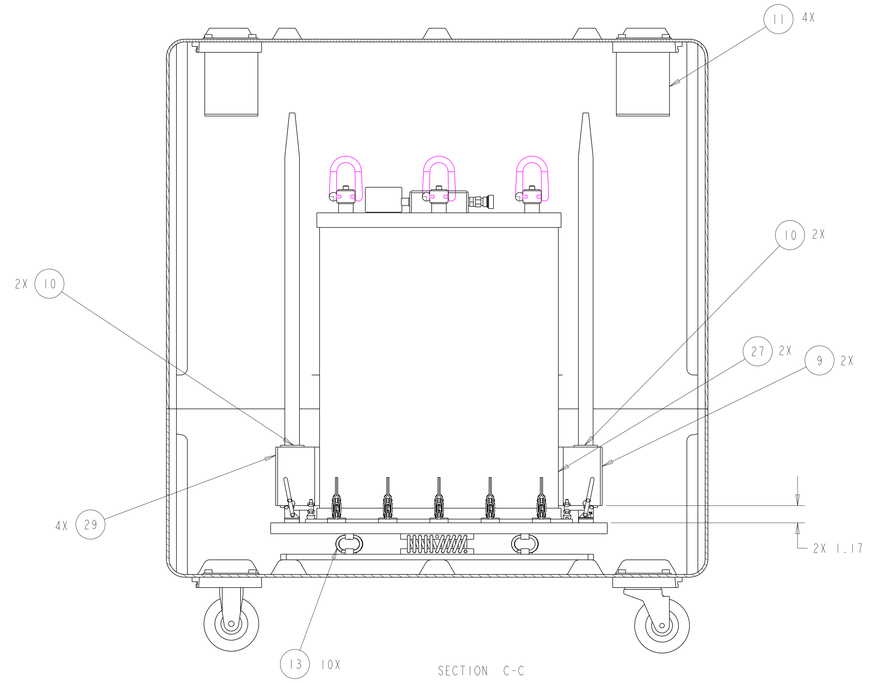

SECTION C-C

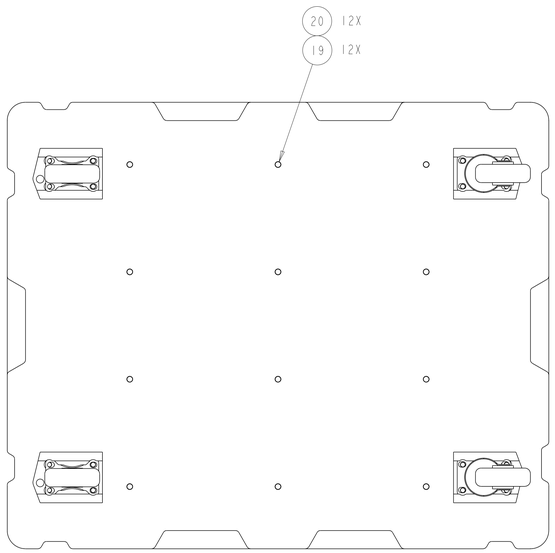

VIEW E-E

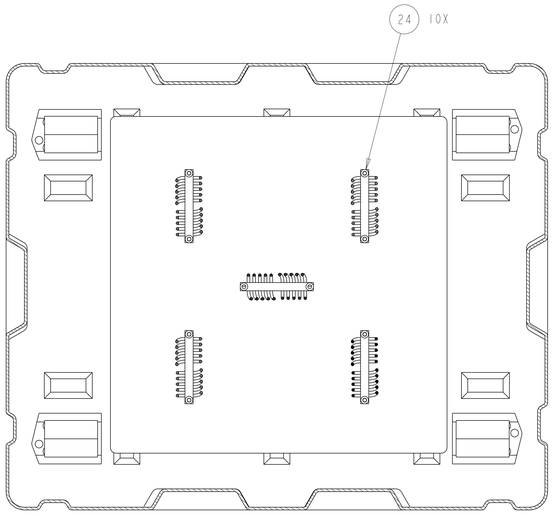

SECTION A-A

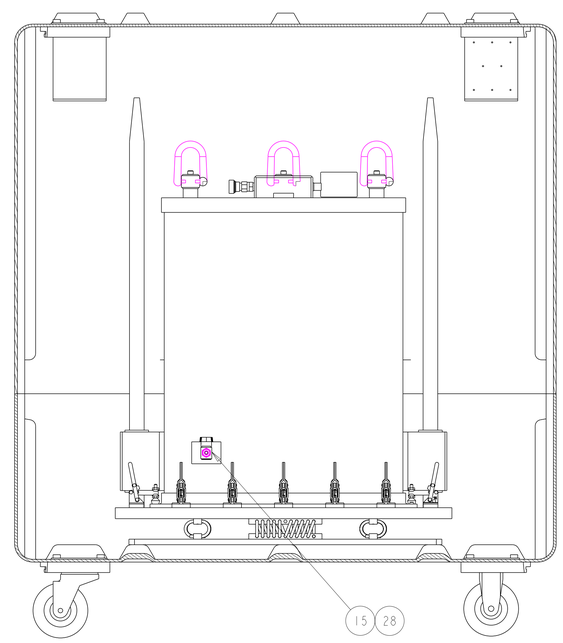

SECTION D-D

MASTER DRAWING

GLAST-CAL CM FILE COPY

RELEASED FOR MANUFACTURE

22 APRIL 2004

NAME	INIT	DATE	CAGE CODE	LAT-DS-03395	REV
CHECKED P. Dizon	PVD	4/22/04		SCALE 0.250	WT	SH 3 OF 3
APPROVED-ENGR P. Dizon	PVD	4/22/04	FILE NAME: LAT-DS-03395 .	MODEL NAME: LAT-DS-03395 .	