REVISION				
SYM	ZONE	DESCRIPTION	DATE	APPROVAL

NOTES: UNLESS OTHERWISE SPECIFIED

1. ELECTROLESS NICKEL PLATE IAW SAE AMS-C-26074, CLASS 4, GRADE A (NOT TO EXCEED .0013 IN).

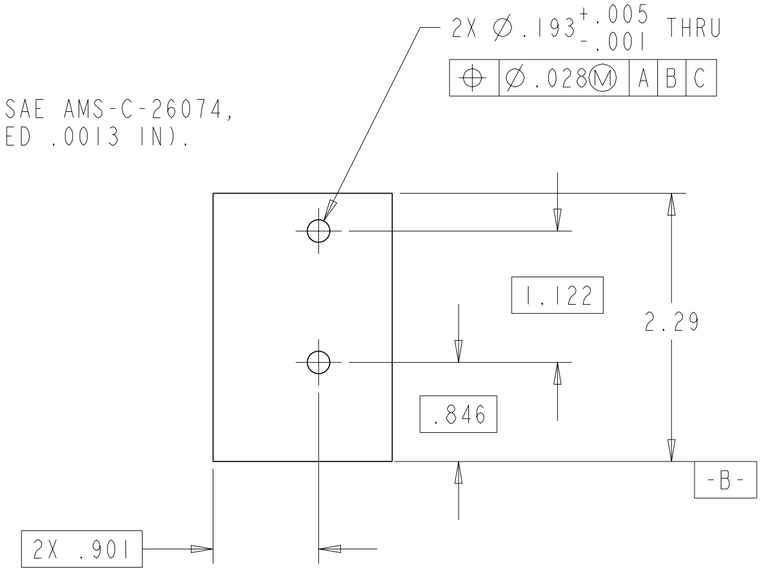

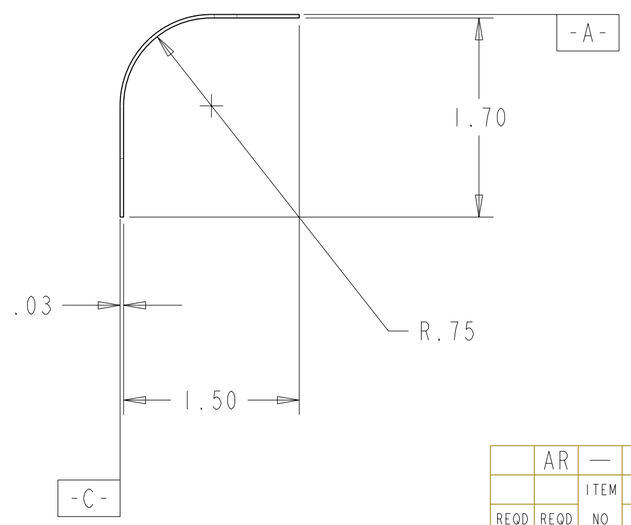

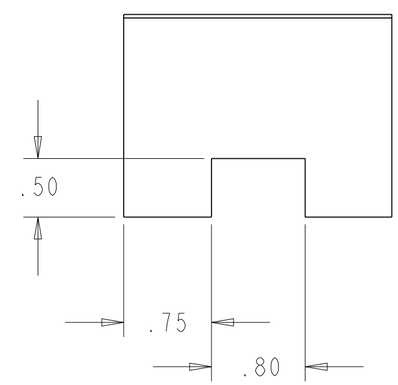

RELEASED FOR MANUFACTURE
25 MAY 2004

MASTER DOCUMENT
GLAST-CAL CM FILE COPY

REQD	REQD	ITEM NO	PART NO.	DESCRIPTION	MATERIAL SPEC
	AR	—	———	SHEET AL ALY	6061-T6 IAW AMS-QQ-A-250/11

LIST OF MATERIAL

	NAME	INIT	DATE
DESIGNER	K. Wolko	KW	5/25/04
DRAWN BY	K. Wolko	KW	5/25/04
CHECKED	P. Dizon	PVD	5/25/04
APPROVED-STRESS			
APPROVED-QA	J. Lee	NV	5/25/04
APPROVED-ENGINEER	P. Dizon	PVD	5/25/04
APPROVED	B. Raynor	WNJ	5/25/04
APPROVED	-		

UNLESS OTHERWISE SPECIFIED: ALL DIMENSION ARE IN INCHES AND APPLY AFTER FINISH

DIMENSION TOLERANCES
.XX: ±0.02
.XXX: ±0.010
ANGLE: ±0.5°
FRACTIONS: ±1/16

125√

INTERPRET DRAWING PER ANSI Y14.5M-1982
REMOVE ALL BURRS AND SHARP EDGES R.010 OR CHAMFER MAX

MODEL NAME: LAT-DS-03844 .
DRW VERSION: .
PRO/ENGINEER VERSION: 2001

GLAST

SPACE SCIENCES DIVISION
NAVAL RESEARCH LABORATORY
WASHINGTON, DC

TITLE
SHIELD, HARNESS, AFEE CABLE GLAST

CAGE CODE		REV
C	LAT-DS-03844	01

SCALE: 1.000 | WT APPROX: | SH 1 OF 1

METRIC
HYBRID METRIC/INCH
THIRD ANGLE PROJECTION

CM CLASSIFICATION

NEXT ASSY	USED ON
-	GLAST

TASK NO: