REVISION				
SYM	ZONE	DESCRIPTION	DATE	APPROVAL

NOTES: UNLESS OTHERWISE SPECIFIED

1. ELECTROLESS NICKEL PLATE IAW SAE AMS-C-26074, CLASS 4, GRADE A (NOT TO EXCEED .0013 IN).

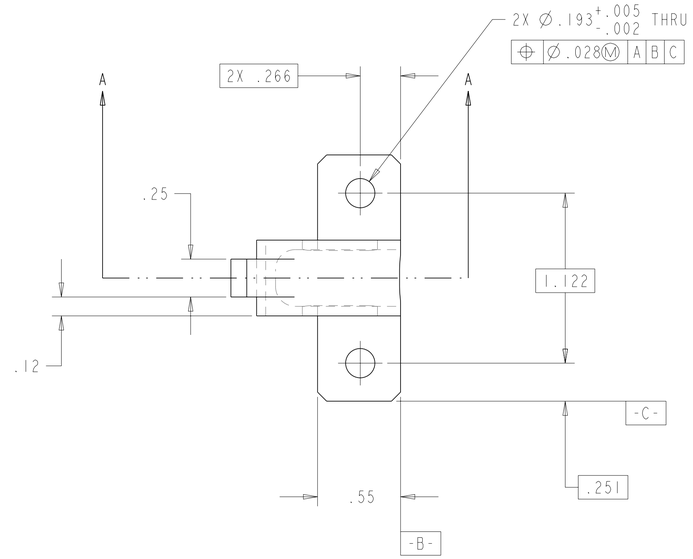

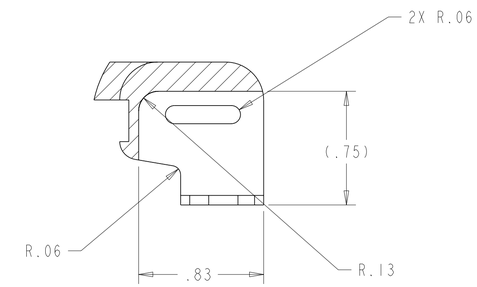

SECTION A-A

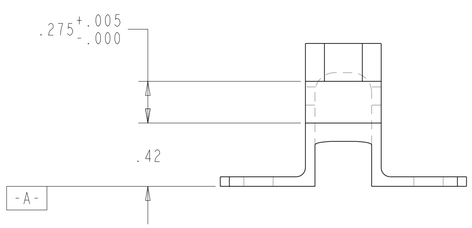

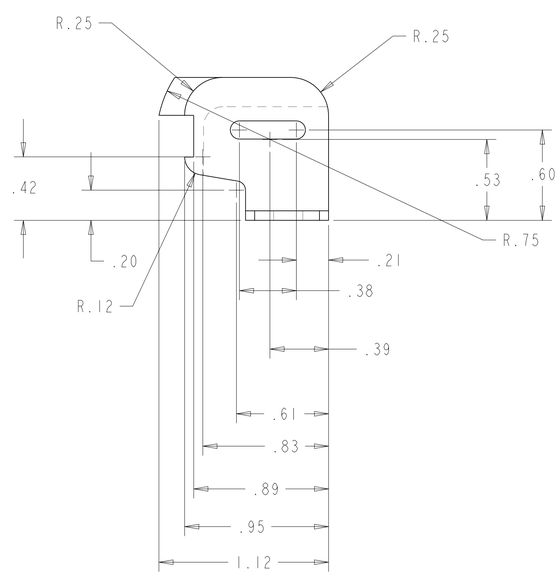

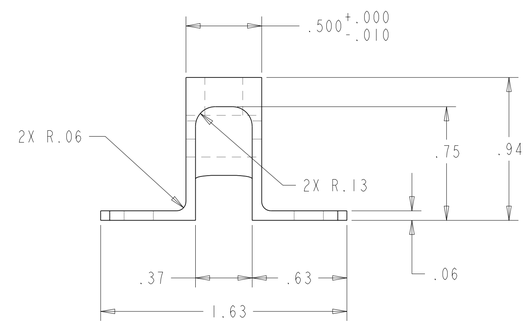

RELEASED FOR MANUFACTURE
25 MAY 2004

MASTER DOCUMENT
GLAST-CAL CM FILE COPY

REQD	REQD	ITEM NO	PART NO.	DESCRIPTION	MATERIAL SPEC
	AR	—	———	PLATE OR BLOCK AL ALY	6061-T651 IAW AMS-QQ-A-225/8 6061-T6511 IAW AMS-QQ-A-200/8

LIST OF MATERIAL

	NAME	INIT	DATE
DESIGNER	K. Wolko	KW	5/25/04
DRAWN BY	K. Wolko	KW	5/25/04
CHECKED	P. Dizon	PVD	5/21/04
APPROVED-STRESS			
APPROVED-QA	J. Lee	NV	5/25/04
APPROVED-ENGINEER	P. Dizon	PVD	5/21/04
APPROVED	B. Raynor	WNJ	5/25/04
APPROVED			

UNLESS OTHERWISE SPECIFIED: ALL DIMENSION ARE IN INCHES AND APPLY AFTER FINISH

DIMENSION TOLERANCES
.XX: ±0.01
.XXX: ±0.005
ANGLE: ±0.5°
FRACTIONS: ±1/16

125

INTERPRET DRAWING PER ANSI Y14.5M-1982
REMOVE ALL BURRS AND SHARP EDGES R.010 OR CHAMFER MAX

MODEL NAME: LAT-DS-03763
DWG VERSION:
PRO/ENGINEER VERSION: 2001

GLAST
SPACE SCIENCES DIVISION
NAVAL RESEARCH LABORATORY
WASHINGTON, DC

TITLE
BRACKET,
AFEE CABLE MOUNT
GLAST

LAT-DS-TBD	GLAST
NEXT ASSY	USED ON

TASK NO:

CM CLASSIFICATION

METRIC
HYBRID METRIC/INCH
THIRD ANGLE PROJECTION

CAGE CODE: D
LAT-DS-03763
REV 01
SCALE: 2.000
WT APPROX:
SH 1 OF 1