REV	DESCRIPTION	DFTR	CHKR	ENGR APPV	DATE

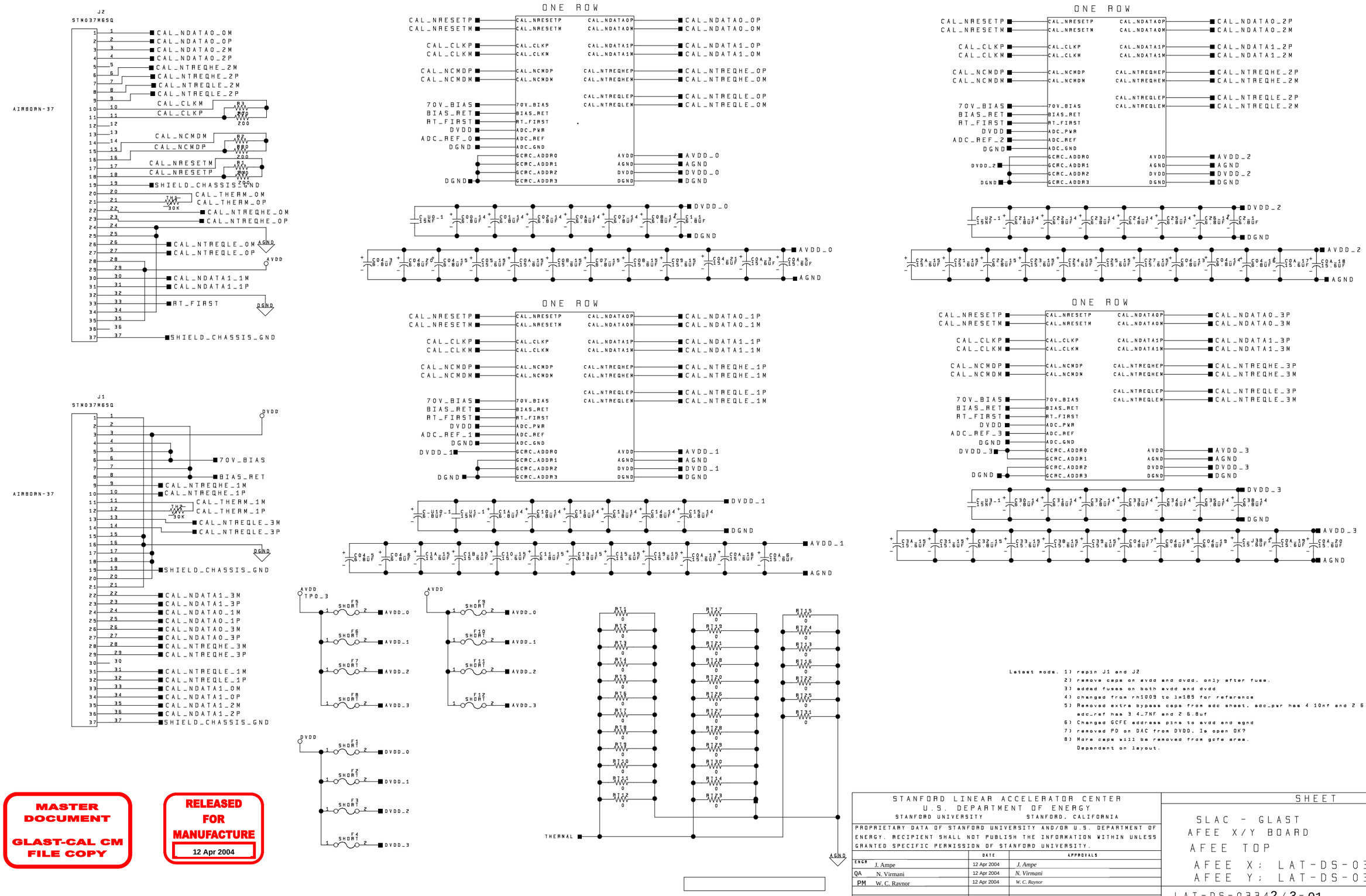

MASTER DOCUMENT

GLAST-CAL CM FILE COPY

RELEASED FOR MANUFACTURE

12 Apr 2004

STANFORD LINEAR ACCELERATOR CENTER
U.S. DEPARTMENT OF ENERGY
STANFORD UNIVERSITY STANFORD, CALIFORNIA

PROPRIETARY DATA OF STANFORD UNIVERSITY AND/OR U.S. DEPARTMENT OF ENERGY. RECIPIENT SHALL NOT PUBLISH THE INFORMATION WITHIN UNLESS GRANTED SPECIFIC PERMISSION OF STANFORD UNIVERSITY.

		DATE	APPROVALS
ENGR	J. Ampe	12 Apr 2004	J. Ampe
QA	N. Virmani	12 Apr 2004	N. Virmani
PM	W. C. Raynor	12 Apr 2004	W. C. Raynor

SHEET OF 57

SLAC - GLAST
AFEE X/Y BOARD
AFEE TOP
AFEE X: LAT-DS-03342
AFEE Y: LAT-DS-03343

LAT-DS-03342/3-01 D

REV	DESCRIPTION	DFTR	CHKR	ENGR APPV	DATE

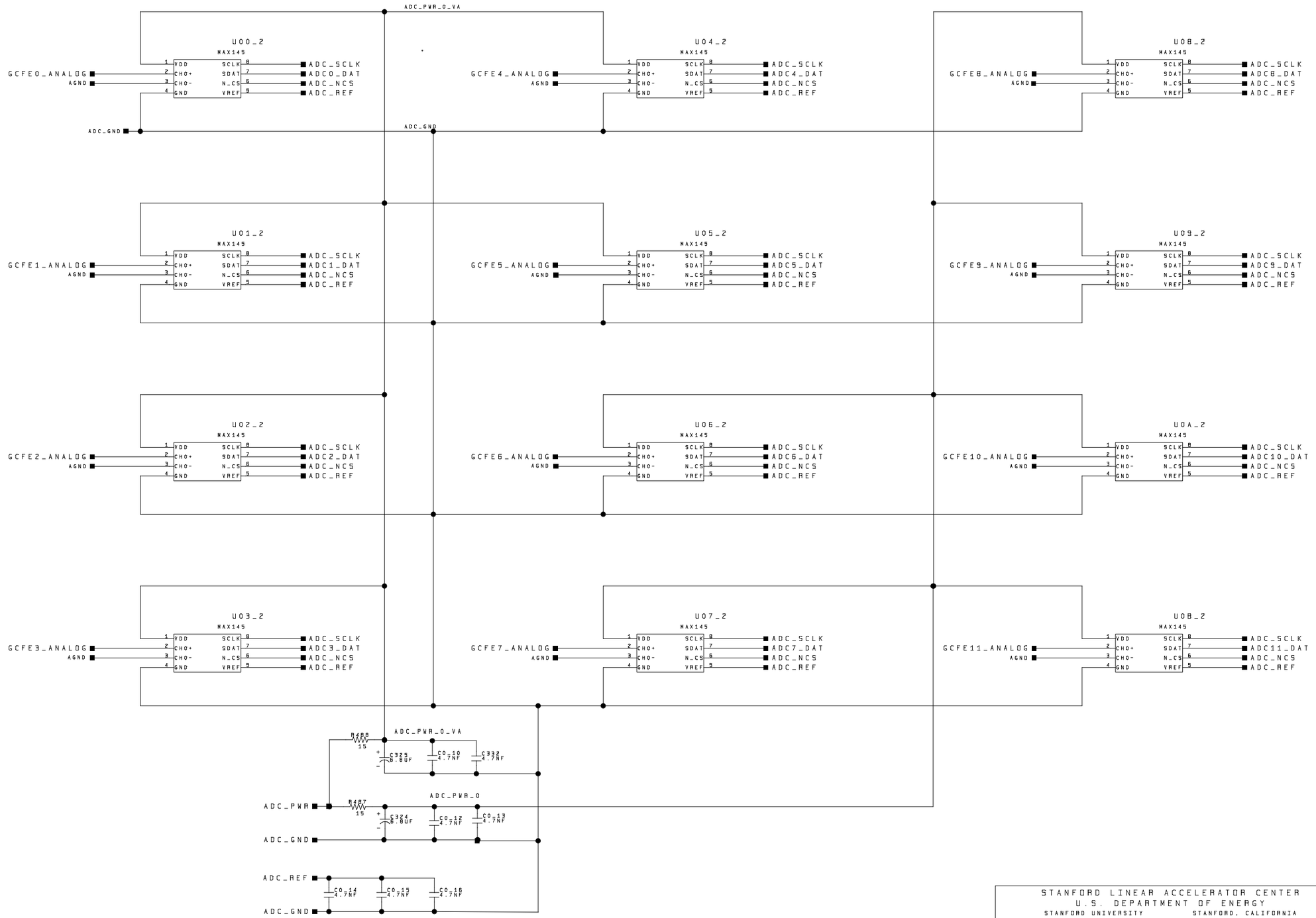

STANFORD LINEAR ACCELERATOR CENTER
U.S. DEPARTMENT OF ENERGY
STANFORD UNIVERSITY STANFORD, CALIFORNIA

PROPRIETARY DATA OF STANFORD UNIVERSITY AND/OR U.S. DEPARTMENT OF ENERGY. RECIPIENT SHALL NOT PUBLISH THE INFORMATION WITHIN UNLESS GRANTED SPECIFIC PERMISSION OF STANFORD UNIVERSITY.

	DATE	APPROVALS
ENGR		
DFTR		
CHKR		

SLAC - GLAST
AFEE X/Y BOARD
TWELVE ADC'S

LAT-DS-03343/4-00 D

REV	DESCRIPTION	DFTR	CHKR	ENGR APPV	DATE

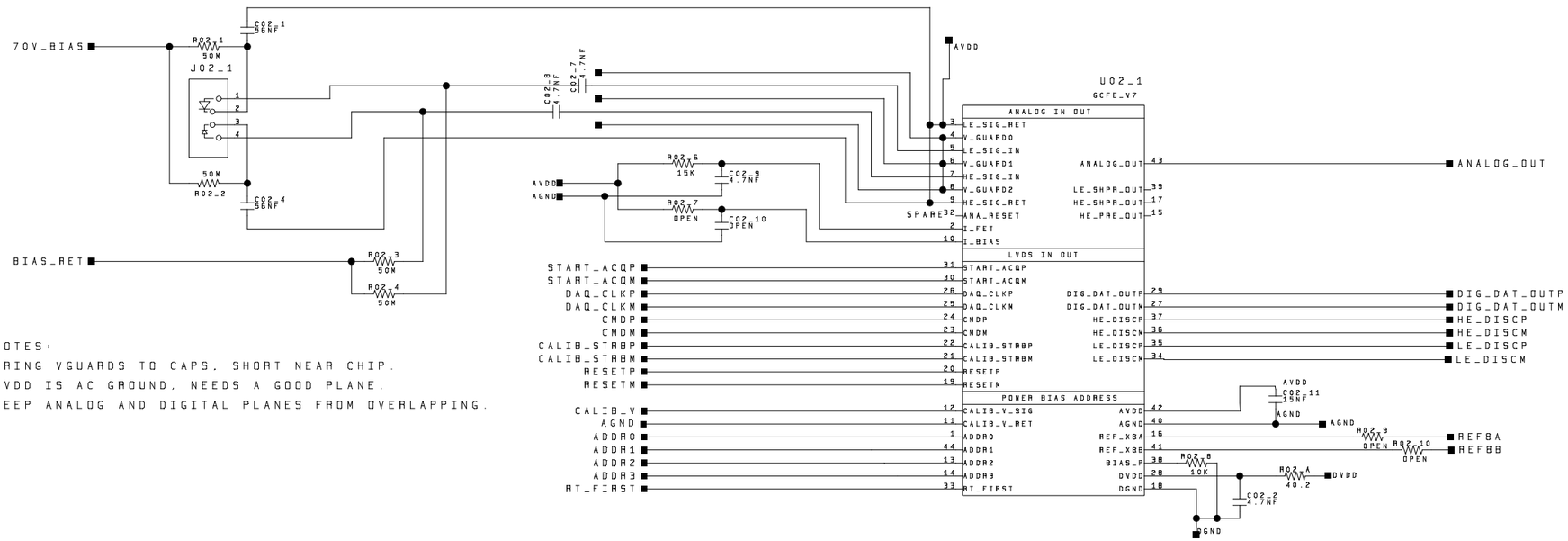

NOTES:

BRING VGUARDS TO CAPS, SHORT NEAR CHIP.

AVDD IS AC GROUND, NEEDS A GOOD PLANE.

KEEP ANALOG AND DIGITAL PLANES FROM OVERLAPPING.

STANFORD LINEAR ACCELERATOR CENTER
U.S. DEPARTMENT OF ENERGY
STANFORD UNIVERSITY STANFORD, CALIFORNIA

PROPRIETARY DATA OF STANFORD UNIVERSITY AND/OR U.S. DEPARTMENT OF ENERGY. RECIPIENT SHALL NOT PUBLISH THE INFORMATION WITHIN UNLESS GRANTED SPECIFIC PERMISSION OF STANFORD UNIVERSITY.

	DATE	APPROVALS
ENGR		
DFTR		
CHKR		

SLAC - GLAST
AFEE X/Y BOARD
ONE GCFE

LAT-DS-03343/4-00 D

REV	DESCRIPTION	DFTR	CHKR	ENGR APPV	DATE

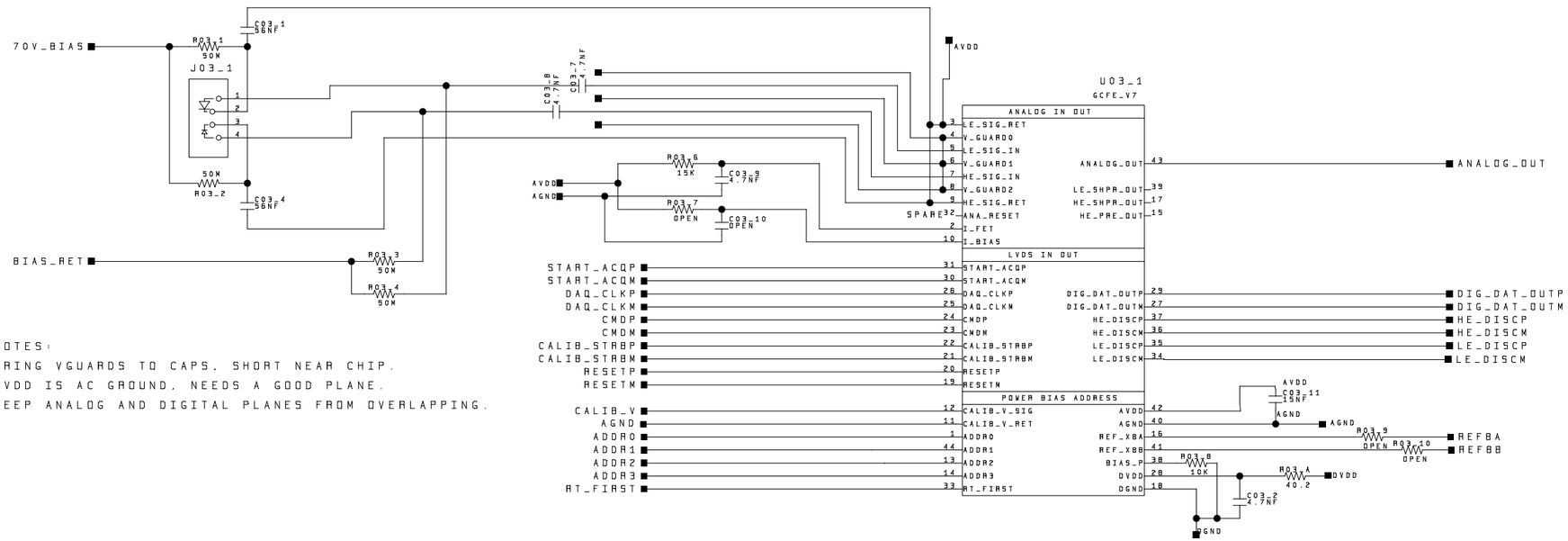

NOTES:

BRING VGUARDS TO CAPS. SHORT NEAR CHIP.

AVDD IS AC GROUND. NEEDS A GOOD PLANE.

KEEP ANALOG AND DIGITAL PLANES FROM OVERLAPPING.

STANFORD LINEAR ACCELERATOR CENTER
U.S. DEPARTMENT OF ENERGY
STANFORD UNIVERSITY STANFORD, CALIFORNIA

PROPRIETARY DATA OF STANFORD UNIVERSITY AND/OR U.S. DEPARTMENT OF ENERGY. RECIPIENT SHALL NOT PUBLISH THE INFORMATION WITHIN UNLESS GRANTED SPECIFIC PERMISSION OF STANFORD UNIVERSITY.

	DATE	APPROVALS
ENGR		
DFTR		
CHKR		

SLAC - GLAST
AFEE X/Y BOARD
ONE GCFE

LAT-DS-03343/4-00 D

REV	DESCRIPTION	DFTR	CHKR	ENGR APPV	DATE

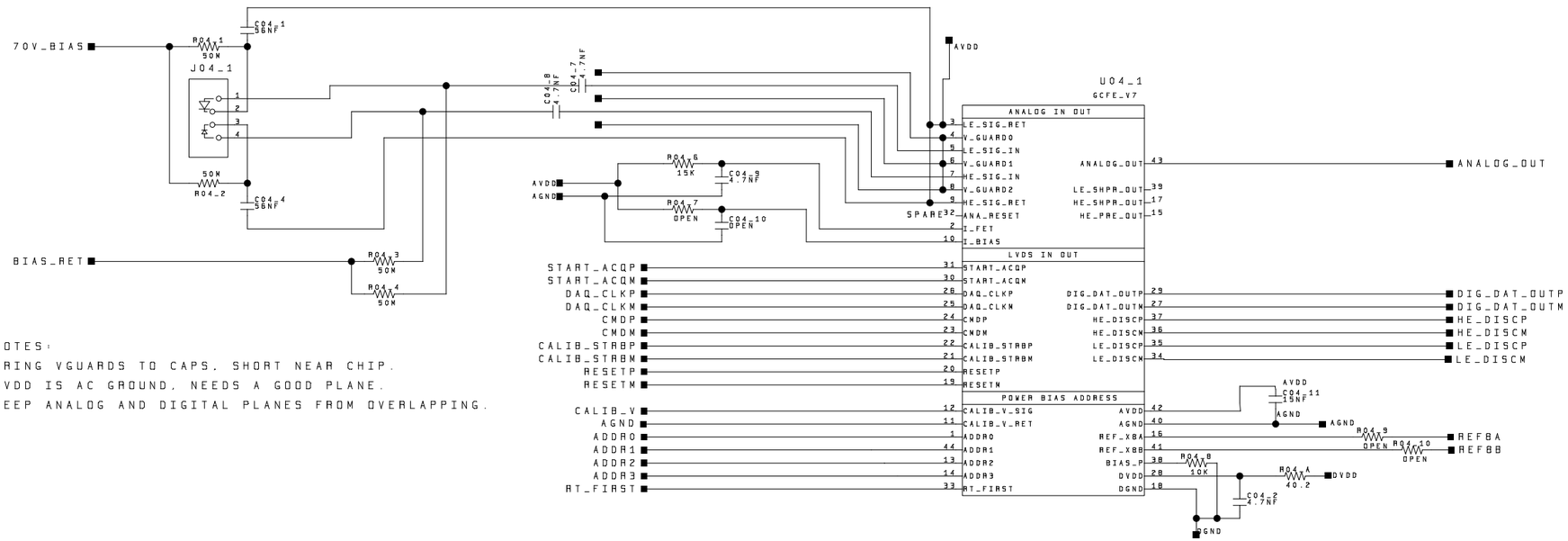

NOTES:

BRING VGUARDS TO CAPS. SHORT NEAR CHIP.

AVDD IS AC GROUND. NEEDS A GOOD PLANE.

KEEP ANALOG AND DIGITAL PLANES FROM OVERLAPPING.

STANFORD LINEAR ACCELERATOR CENTER
U.S. DEPARTMENT OF ENERGY
STANFORD UNIVERSITY STANFORD, CALIFORNIA

PROPRIETARY DATA OF STANFORD UNIVERSITY AND/OR U.S. DEPARTMENT OF ENERGY. RECIPIENT SHALL NOT PUBLISH THE INFORMATION WITHIN UNLESS GRANTED SPECIFIC PERMISSION OF STANFORD UNIVERSITY.

	DATE	APPROVALS
ENGR		
DFTR		
CHKR		

SLAC - GLAST
AFEE X/Y BOARD
ONE GCFE

LAT-DS-03343/4-00 D

REV	DESCRIPTION	DFTR	CHKR	ENGR APPV	DATE

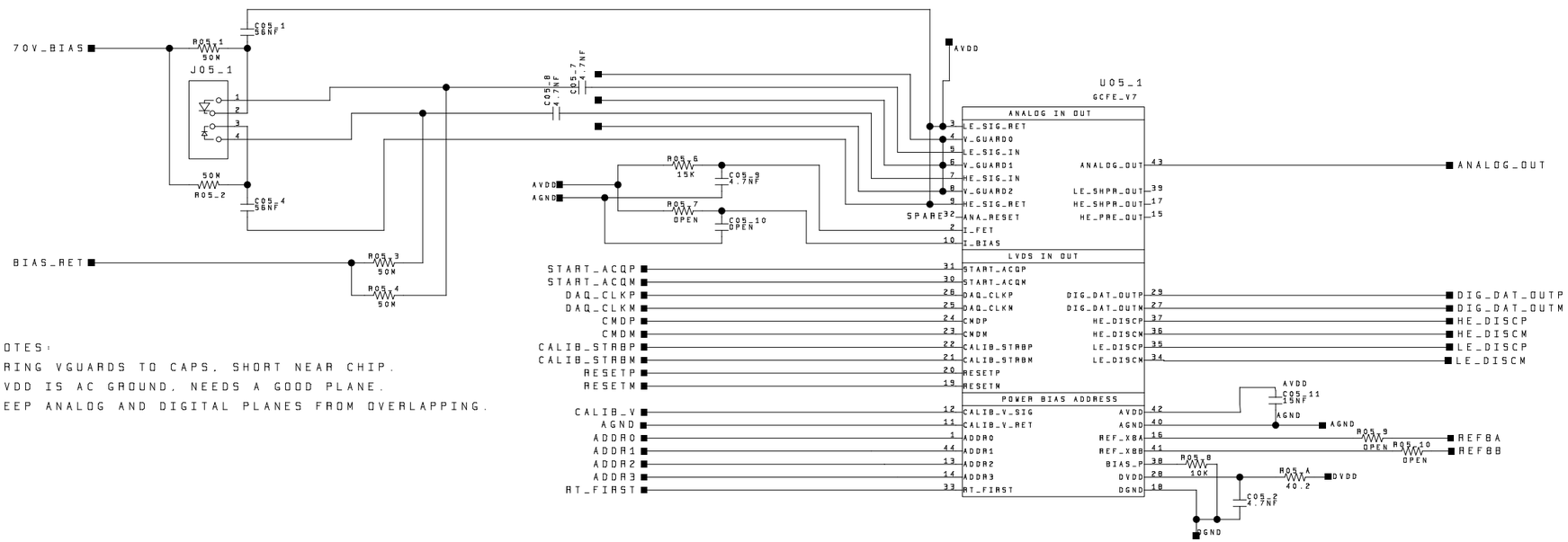

NOTES:

BRING VGUARDS TO CAPS, SHORT NEAR CHIP.

AVDD IS AC GROUND, NEEDS A GOOD PLANE.

KEEP ANALOG AND DIGITAL PLANES FROM OVERLAPPING.

STANFORD LINEAR ACCELERATOR CENTER
U.S. DEPARTMENT OF ENERGY
STANFORD UNIVERSITY STANFORD, CALIFORNIA

PROPRIETARY DATA OF STANFORD UNIVERSITY AND/OR U.S. DEPARTMENT OF ENERGY. RECIPIENT SHALL NOT PUBLISH THE INFORMATION WITHIN UNLESS GRANTED SPECIFIC PERMISSION OF STANFORD UNIVERSITY.

	DATE	APPROVALS
ENGR		
DFTR		
CHKR		

SLAC - GLAST
AFEE X/Y BOARD
ONE GCFE

LAT-DS-03343/4-00 D

REV	DESCRIPTION	DFTR	CHKR	ENGR APPV	DATE

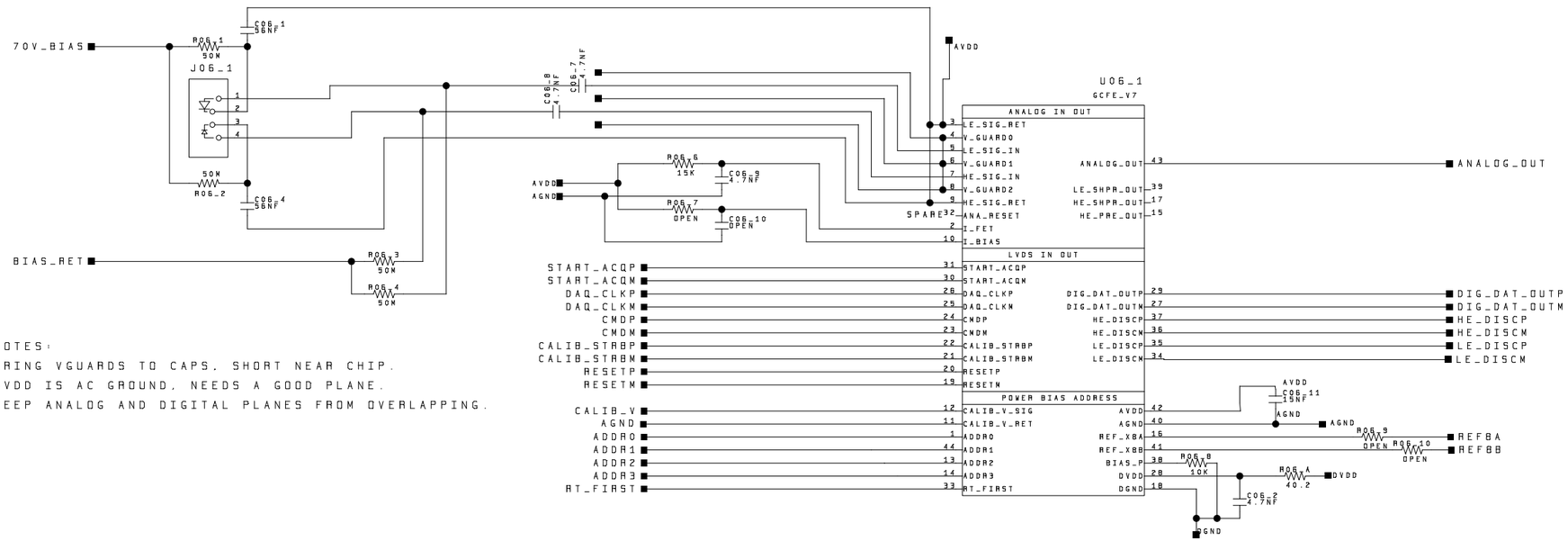

NOTES:

BRING VGUARDS TO CAPS. SHORT NEAR CHIP.

AVDD IS AC GROUND. NEEDS A GOOD PLANE.

KEEP ANALOG AND DIGITAL PLANES FROM OVERLAPPING.

STANFORD LINEAR ACCELERATOR CENTER
U.S. DEPARTMENT OF ENERGY
STANFORD UNIVERSITY STANFORD, CALIFORNIA

PROPRIETARY DATA OF STANFORD UNIVERSITY AND/OR U.S. DEPARTMENT OF ENERGY. RECIPIENT SHALL NOT PUBLISH THE INFORMATION WITHIN UNLESS GRANTED SPECIFIC PERMISSION OF STANFORD UNIVERSITY.

	DATE	APPROVALS
ENGR		
DFTR		
CHKR		

SLAC - GLAST
AFEE X/Y BOARD
ONE GCFE

LAT-DS-03343/4-00 D

REV	DESCRIPTION	DFTR	CHKR	ENGR APPV	DATE

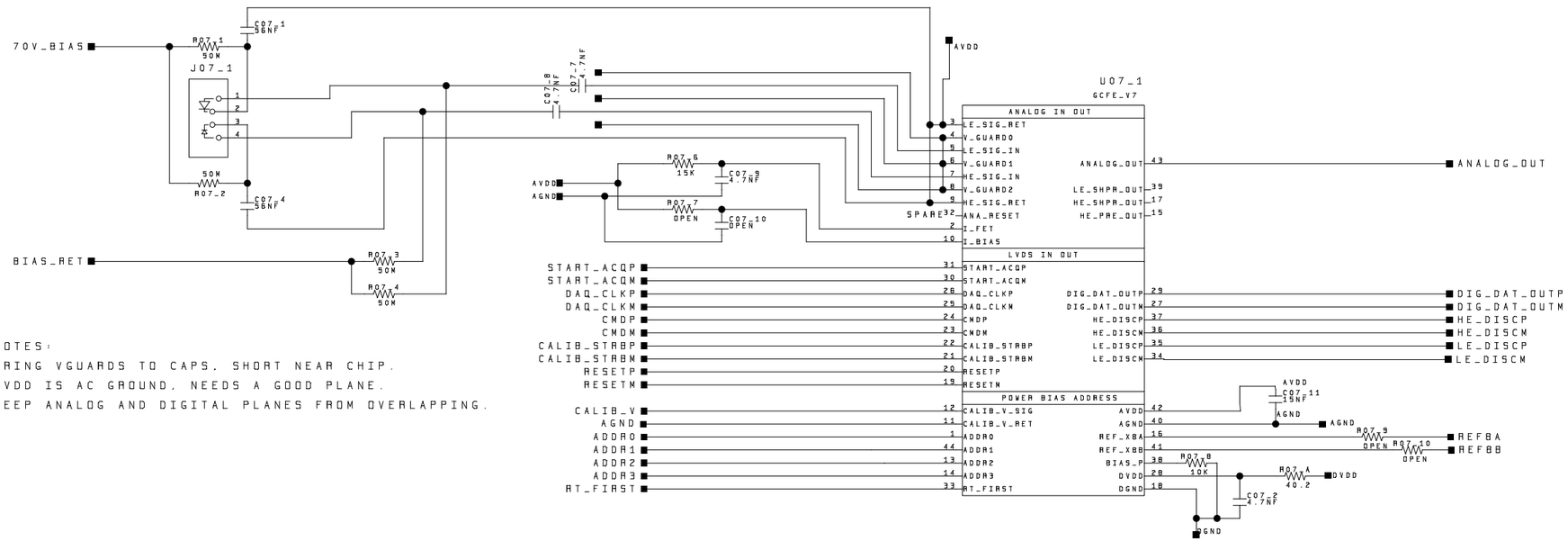

NOTES:

BRING VGUARDS TO CAPS, SHORT NEAR CHIP.

AVDD IS AC GROUND, NEEDS A GOOD PLANE.

KEEP ANALOG AND DIGITAL PLANES FROM OVERLAPPING.

STANFORD LINEAR ACCELERATOR CENTER
U.S. DEPARTMENT OF ENERGY
STANFORD UNIVERSITY STANFORD, CALIFORNIA

PROPRIETARY DATA OF STANFORD UNIVERSITY AND/OR U.S. DEPARTMENT OF ENERGY. RECIPIENT SHALL NOT PUBLISH THE INFORMATION WITHIN UNLESS GRANTED SPECIFIC PERMISSION OF STANFORD UNIVERSITY.

	DATE	APPROVALS
ENGR		
DFTR		
CHKR		

SLAC - GLAST
AFEE X/Y BOARD
ONE GCFE

LAT-DS-03343/4-00 D

REV	DESCRIPTION	DFTR	CHKR	ENGR APPV	DATE

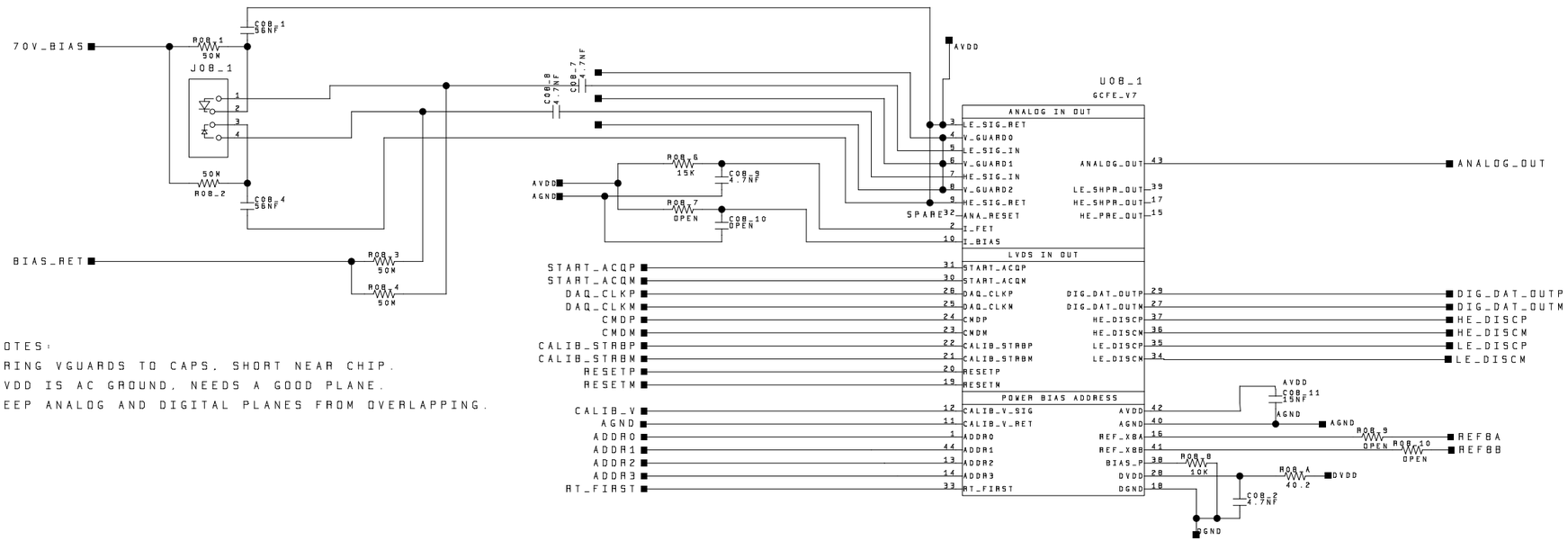

NOTES:

BRING VGUARDS TO CAPS. SHORT NEAR CHIP.

AVDD IS AC GROUND. NEEDS A GOOD PLANE.

KEEP ANALOG AND DIGITAL PLANES FROM OVERLAPPING.

STANFORD LINEAR ACCELERATOR CENTER
U.S. DEPARTMENT OF ENERGY
STANFORD UNIVERSITY STANFORD, CALIFORNIA

PROPRIETARY DATA OF STANFORD UNIVERSITY AND/OR U.S. DEPARTMENT OF ENERGY. RECIPIENT SHALL NOT PUBLISH THE INFORMATION WITHIN UNLESS GRANTED SPECIFIC PERMISSION OF STANFORD UNIVERSITY.

	DATE	APPROVALS
ENGR		
DFTR		
CHKR		

SHEET OF 57

SLAC - GLAST
AFEE X/Y BOARD
ONE GCFE

LAT-DS-03343/4-00 D

REV	DESCRIPTION	DFTR	CHKR	ENGR APPV	DATE

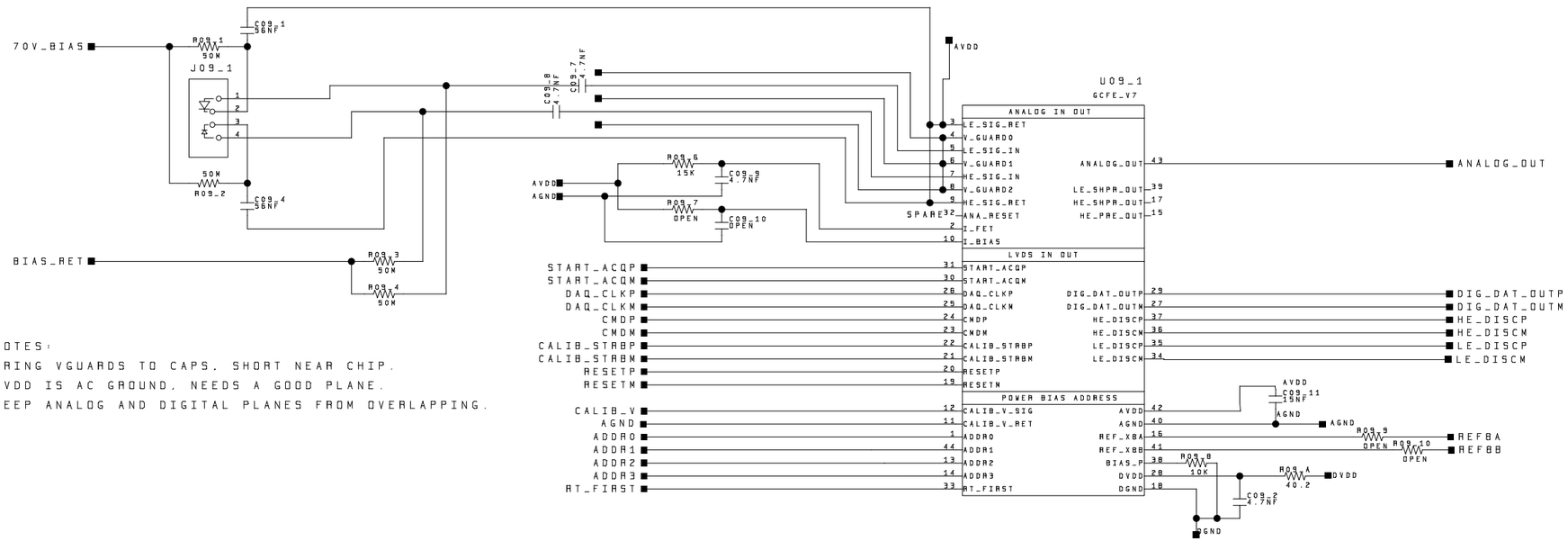

NOTES:

BRING VGUARDS TO CAPS, SHORT NEAR CHIP.

AVDD IS AC GROUND, NEEDS A GOOD PLANE.

KEEP ANALOG AND DIGITAL PLANES FROM OVERLAPPING.

STANFORD LINEAR ACCELERATOR CENTER
U.S. DEPARTMENT OF ENERGY
STANFORD UNIVERSITY STANFORD, CALIFORNIA

PROPRIETARY DATA OF STANFORD UNIVERSITY AND/OR U.S. DEPARTMENT OF ENERGY. RECIPIENT SHALL NOT PUBLISH THE INFORMATION WITHIN UNLESS GRANTED SPECIFIC PERMISSION OF STANFORD UNIVERSITY.

	DATE	APPROVALS
ENGR		
DFTR		
CHKR		

SLAC - GLAST
AFEE X/Y BOARD
ONE GCFE

LAT-DS-03343/4-00 D

REV	DESCRIPTION	DFTR	CHKR	ENGR APPV	DATE

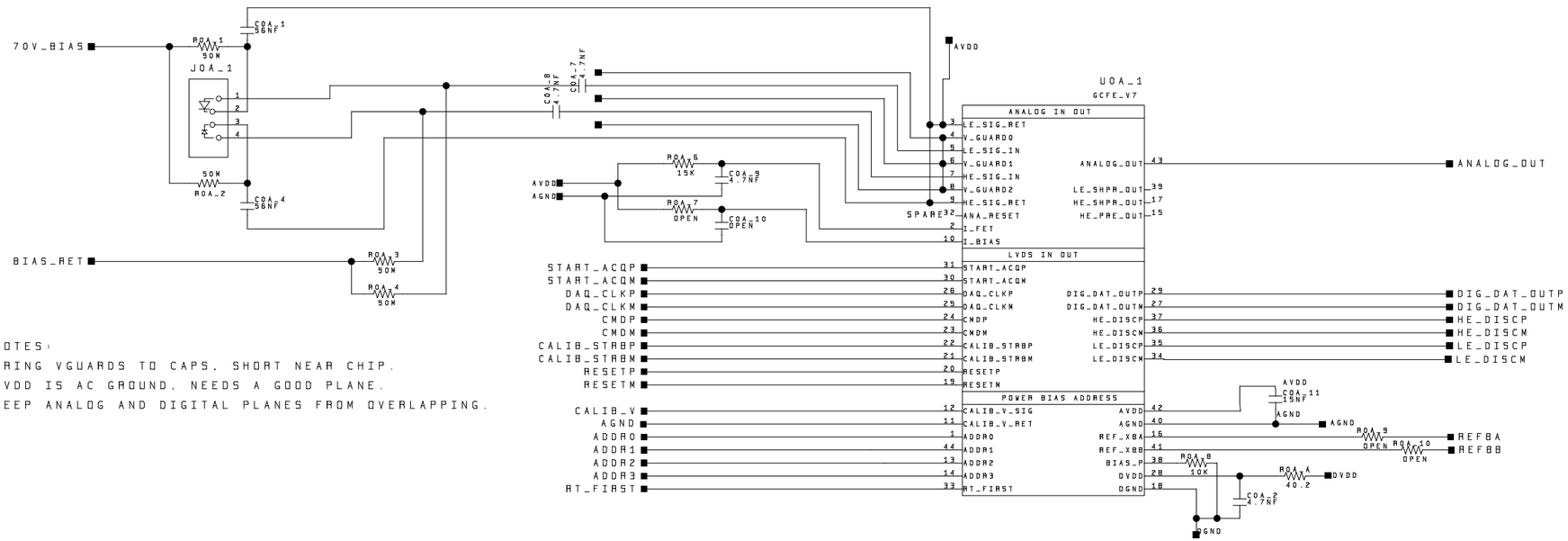

NOTES:

BRING VGUARDS TO CAPS, SHORT NEAR CHIP.

AVDD IS AC GROUND, NEEDS A GOOD PLANE.

KEEP ANALOG AND DIGITAL PLANES FROM OVERLAPPING.

STANFORD LINEAR ACCELERATOR CENTER
U.S. DEPARTMENT OF ENERGY
STANFORD UNIVERSITY STANFORD, CALIFORNIA

PROPRIETARY DATA OF STANFORD UNIVERSITY AND/OR U.S. DEPARTMENT OF ENERGY. RECIPIENT SHALL NOT PUBLISH THE INFORMATION WITHIN UNLESS GRANTED SPECIFIC PERMISSION OF STANFORD UNIVERSITY.

	DATE	APPROVALS
ENGR		
DFTR		
CHKR		

SLAC - GLAST
AFEE X/Y BOARD
ONE GCFE

LAT-DS-03343/4-00 D

REV	DESCRIPTION	DFTR	CHKR	ENGR APPV	DATE

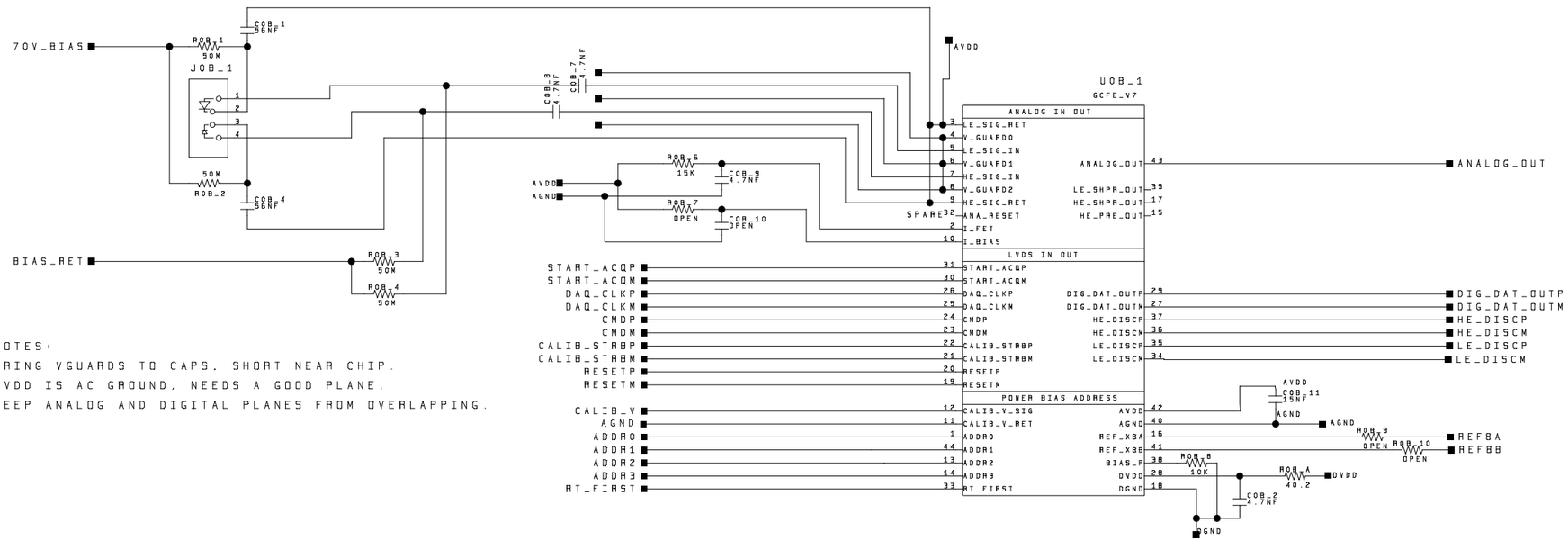

NOTES:

BRING VGUARDS TO CAPS, SHORT NEAR CHIP.

AVDD IS AC GROUND, NEEDS A GOOD PLANE.

KEEP ANALOG AND DIGITAL PLANES FROM OVERLAPPING.

STANFORD LINEAR ACCELERATOR CENTER
U.S. DEPARTMENT OF ENERGY
STANFORD UNIVERSITY STANFORD, CALIFORNIA

PROPRIETARY DATA OF STANFORD UNIVERSITY AND/OR U.S. DEPARTMENT OF ENERGY. RECIPIENT SHALL NOT PUBLISH THE INFORMATION WITHIN UNLESS GRANTED SPECIFIC PERMISSION OF STANFORD UNIVERSITY.

	DATE	APPROVALS
ENGR		
DFTR		
CHKR		

SLAC - GLAST
AFEE X/Y BOARD
ONE GCFE

LAT-DS-03343/4-00 D

REV	DESCRIPTION	DFTR	CHKR	ENGR APPV	DATE

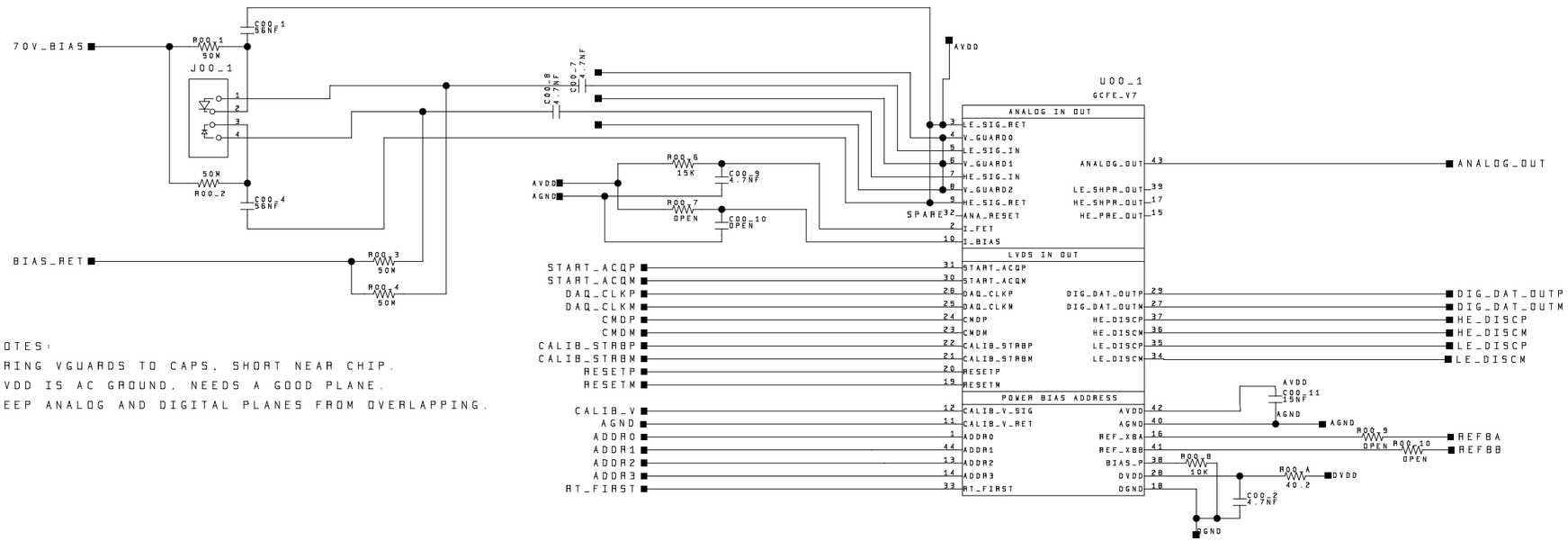

NOTES:

BRING VGUARDS TO CAPS, SHORT NEAR CHIP.

AVDD IS AC GROUND, NEEDS A GOOD PLANE.

KEEP ANALOG AND DIGITAL PLANES FROM OVERLAPPING.

STANFORD LINEAR ACCELERATOR CENTER
U.S. DEPARTMENT OF ENERGY
STANFORD UNIVERSITY STANFORD, CALIFORNIA

PROPRIETARY DATA OF STANFORD UNIVERSITY AND/OR U.S. DEPARTMENT OF ENERGY. RECIPIENT SHALL NOT PUBLISH THE INFORMATION WITHIN UNLESS GRANTED SPECIFIC PERMISSION OF STANFORD UNIVERSITY.

	DATE	APPROVALS
ENGR		
DFTR		
CHKR		

SLAC - GLAST
AFEE X/Y BOARD
ONE GCFE

LAT-DS-03343/4-00 D

REV	DESCRIPTION	DFTR	CHKR	ENGR APPV	DATE

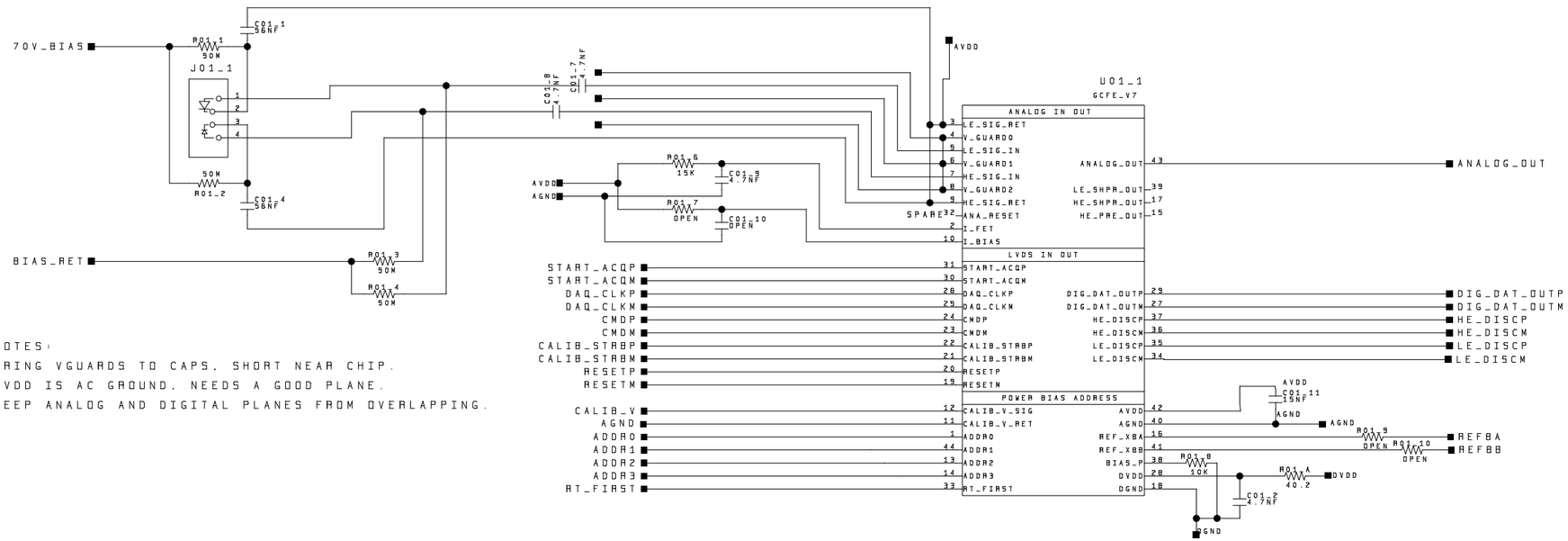

NOTES:

BRING VGUARDS TO CAPS. SHORT NEAR CHIP.

AVDD IS AC GROUND. NEEDS A GOOD PLANE.

KEEP ANALOG AND DIGITAL PLANES FROM OVERLAPPING.

STANFORD LINEAR ACCELERATOR CENTER
U.S. DEPARTMENT OF ENERGY
STANFORD UNIVERSITY STANFORD, CALIFORNIA

PROPRIETARY DATA OF STANFORD UNIVERSITY AND/OR U.S. DEPARTMENT OF ENERGY. RECIPIENT SHALL NOT PUBLISH THE INFORMATION WITHIN UNLESS GRANTED SPECIFIC PERMISSION OF STANFORD UNIVERSITY.

	DATE	APPROVALS
ENGR		
DFTR		
CHKR		

SHEET OF 57

SLAC - GLAST
AFEE X/Y BOARD
ONE GCFE

LAT-DS-03343/4-00 D

REV	DESCRIPTION	DFTR	CHKR	ENGR APPV	DATE

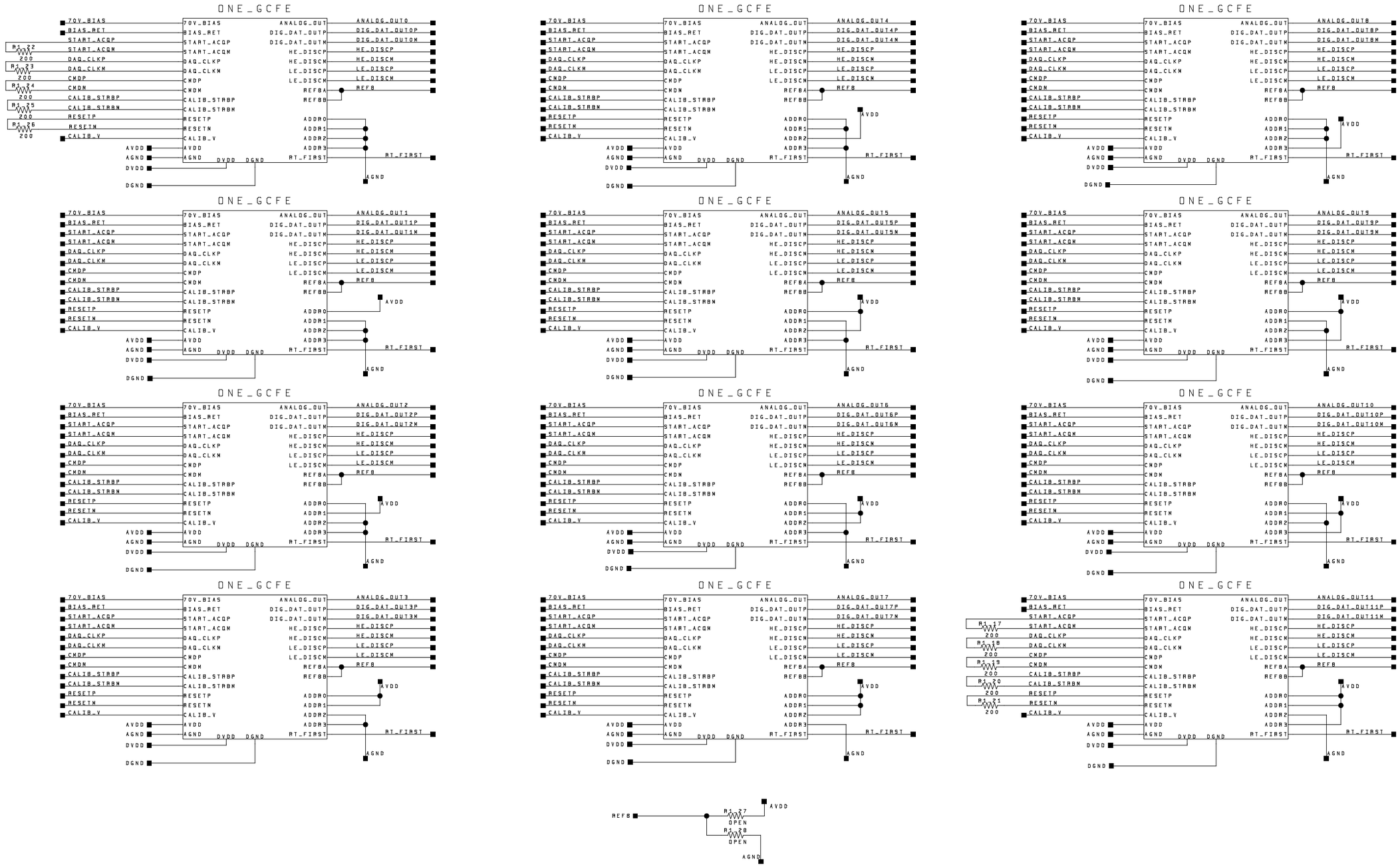

STANFORD LINEAR ACCELERATOR CENTER
U.S. DEPARTMENT OF ENERGY
STANFORD UNIVERSITY STANFORD, CALIFORNIA

PROPRIETARY DATA OF STANFORD UNIVERSITY AND/OR U.S. DEPARTMENT OF ENERGY. RECIPIENT SHALL NOT PUBLISH THE INFORMATION WITHIN UNLESS GRANTED SPECIFIC PERMISSION OF STANFORD UNIVERSITY.

	DATE	APPROVALS
ENGR		
DFTR		
CHKR		

SHEET OF 57

SLAC - GLAST
AFEE X/Y BOARD
TWELVE GCFE's

LAT-DS-03343/4-00 D

REV	DESCRIPTION	DFTR	CHKR	ENGR APPV	DATE

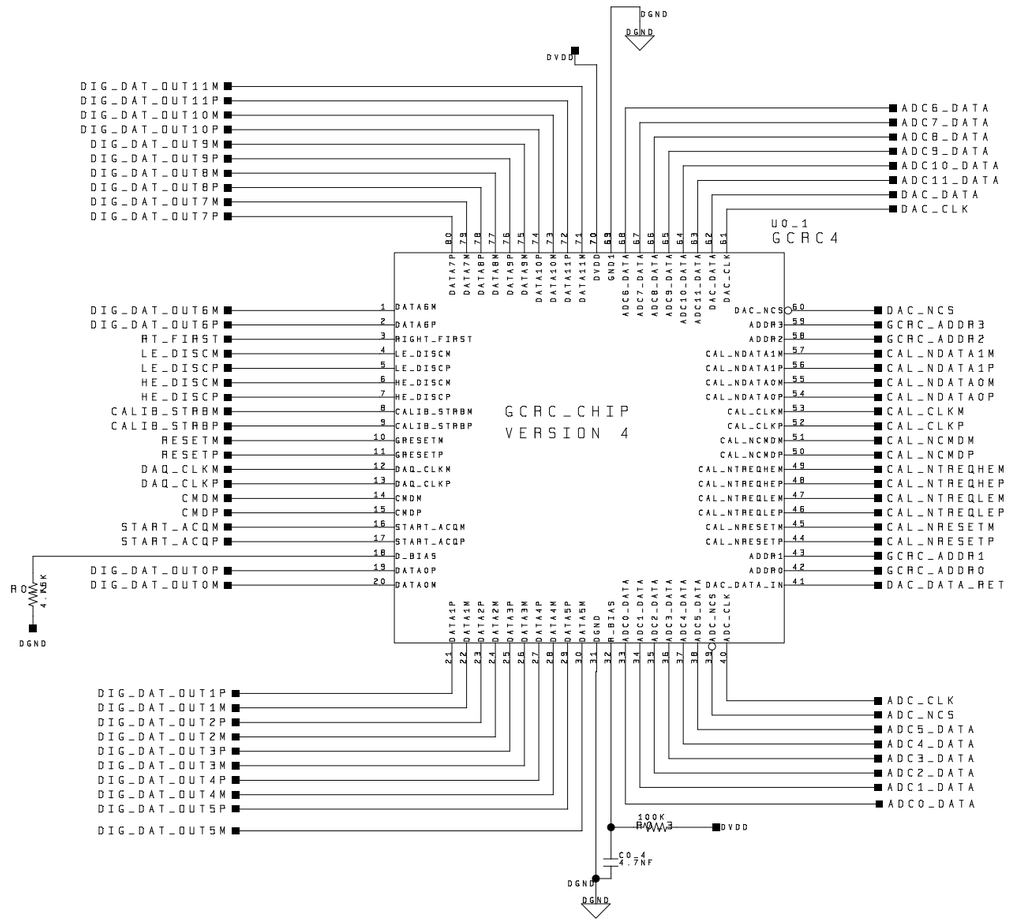

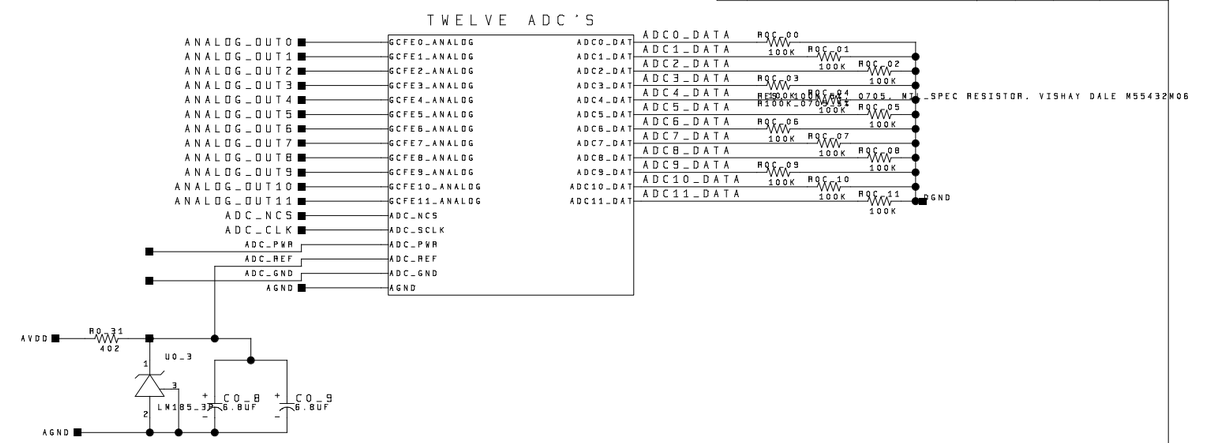

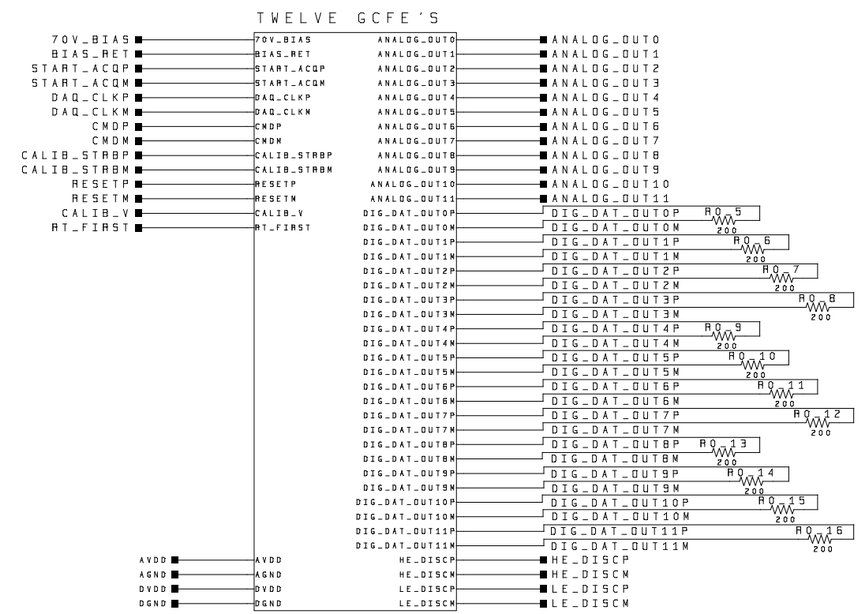

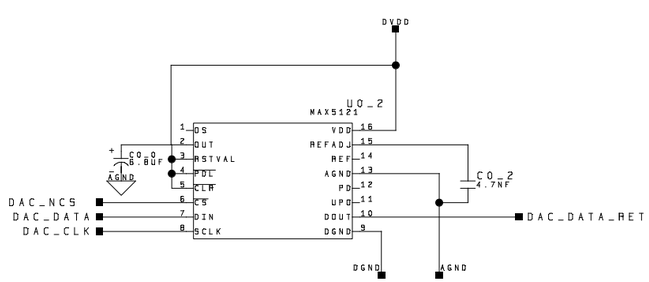

STANFORD LINEAR ACCELERATOR CENTER
U.S. DEPARTMENT OF ENERGY
STANFORD UNIVERSITY STANFORD, CALIFORNIA

PROPRIETARY DATA OF STANFORD UNIVERSITY AND/OR U.S. DEPARTMENT OF ENERGY. RECIPIENT SHALL NOT PUBLISH THE INFORMATION WITHIN UNLESS GRANTED SPECIFIC PERMISSION OF STANFORD UNIVERSITY.

	DATE	APPROVALS
ENGR		
DFTR		
CHKR		

SLAC - GLAST
AFEE X/Y BOARD
ONE ROW
AFEE X: LAT-DS-03342
AFEE Y: LAT-DS-03343

LAT-DS-03343/4-00 D

REV	DESCRIPTION	DFTR	CHKR	ENGR APPV	DATE

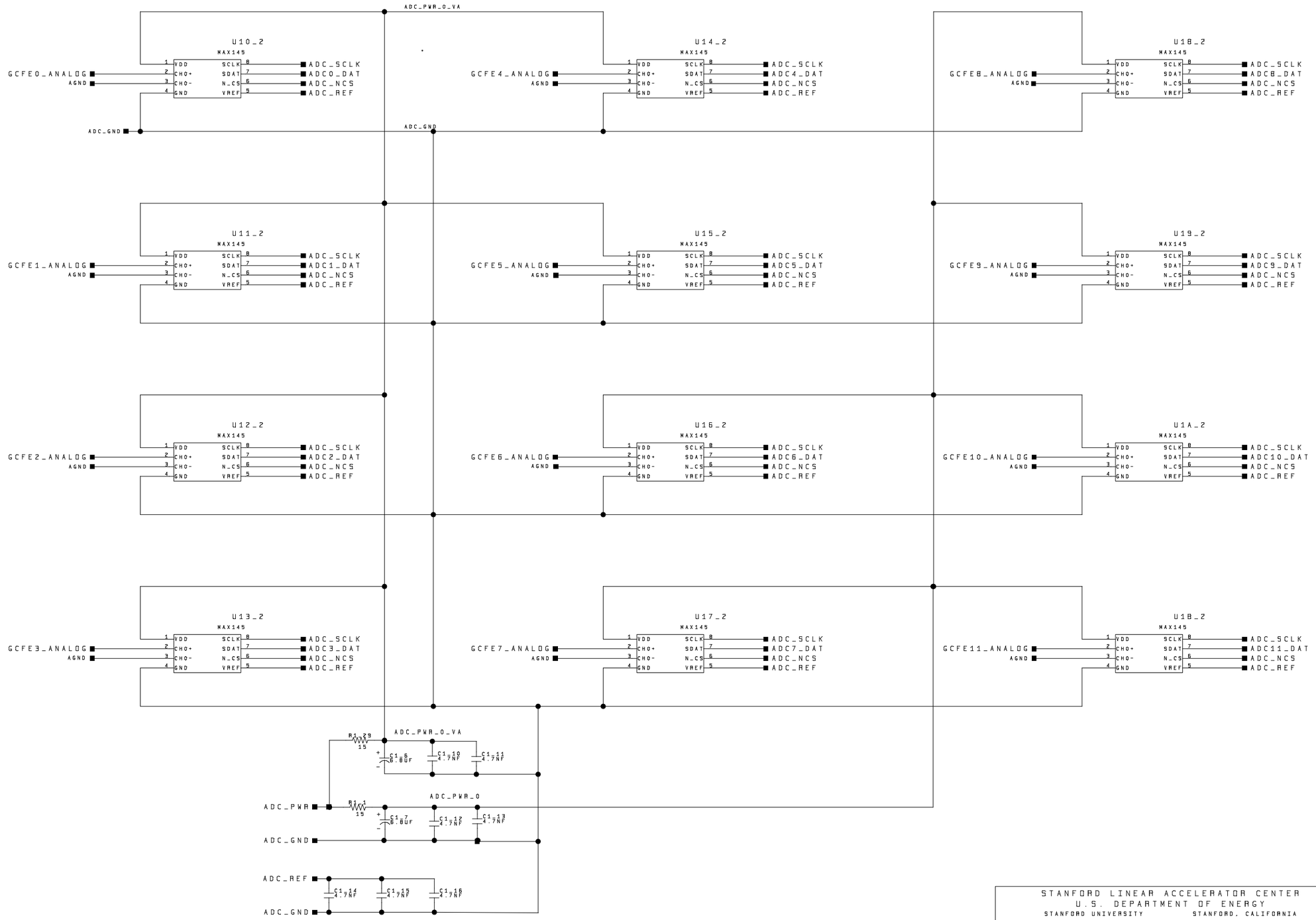

STANFORD LINEAR ACCELERATOR CENTER
U.S. DEPARTMENT OF ENERGY
STANFORD UNIVERSITY STANFORD, CALIFORNIA

PROPRIETARY DATA OF STANFORD UNIVERSITY AND/OR U.S. DEPARTMENT OF ENERGY. RECIPIENT SHALL NOT PUBLISH THE INFORMATION WITHIN UNLESS GRANTED SPECIFIC PERMISSION OF STANFORD UNIVERSITY.

	DATE	APPROVALS
ENGR		
DFTR		
CHKR		

SLAC - GLAST
AFEE X/Y BOARD
TWELVE ADC'S

LAT-DS-03343/4-00 D

REV	DESCRIPTION	DFTR	CHKR	ENGR APPV	DATE

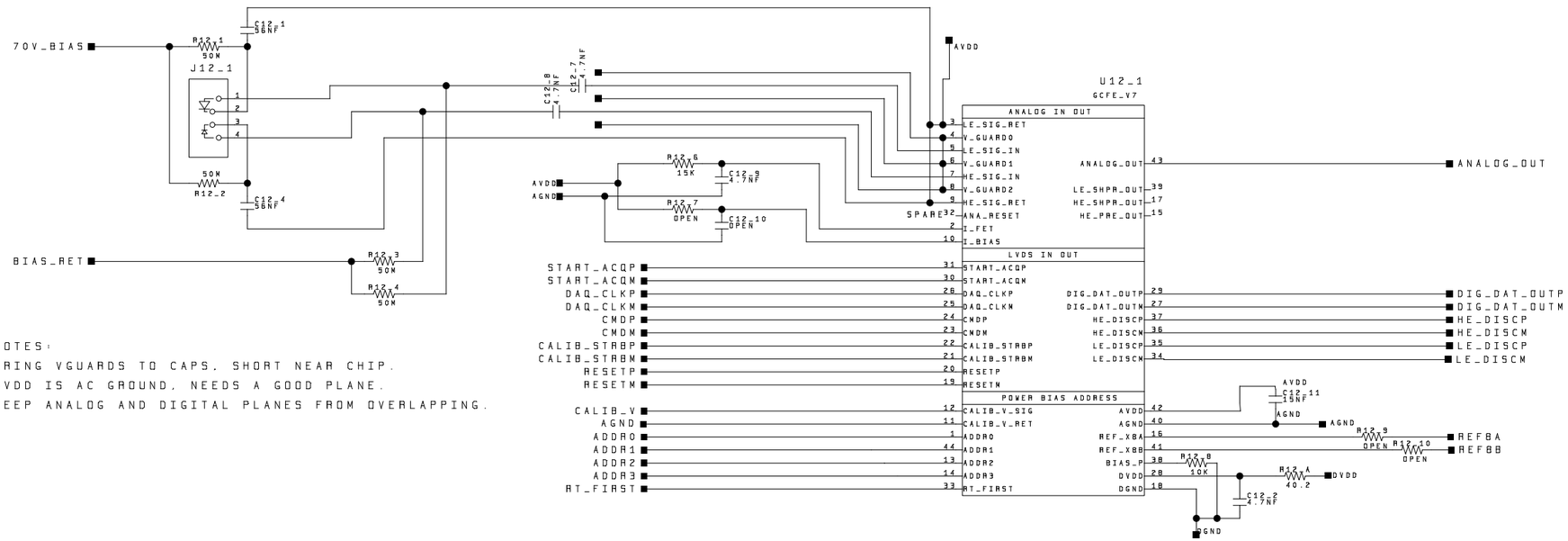

NOTES:

BRING VGUARDS TO CAPS, SHORT NEAR CHIP.

AVDD IS AC GROUND, NEEDS A GOOD PLANE.

KEEP ANALOG AND DIGITAL PLANES FROM OVERLAPPING.

STANFORD LINEAR ACCELERATOR CENTER
U.S. DEPARTMENT OF ENERGY
STANFORD UNIVERSITY STANFORD, CALIFORNIA

PROPRIETARY DATA OF STANFORD UNIVERSITY AND/OR U.S. DEPARTMENT OF ENERGY. RECIPIENT SHALL NOT PUBLISH THE INFORMATION WITHIN UNLESS GRANTED SPECIFIC PERMISSION OF STANFORD UNIVERSITY.

	DATE	APPROVALS
ENGR		
DFTR		
CHKR		

SHEET OF 57

SLAC - GLAST
AFEE X/Y BOARD
ONE GCFE

LAT-DS-03343/4-00 D

REV	DESCRIPTION	DFTR	CHKR	ENGR APPV	DATE

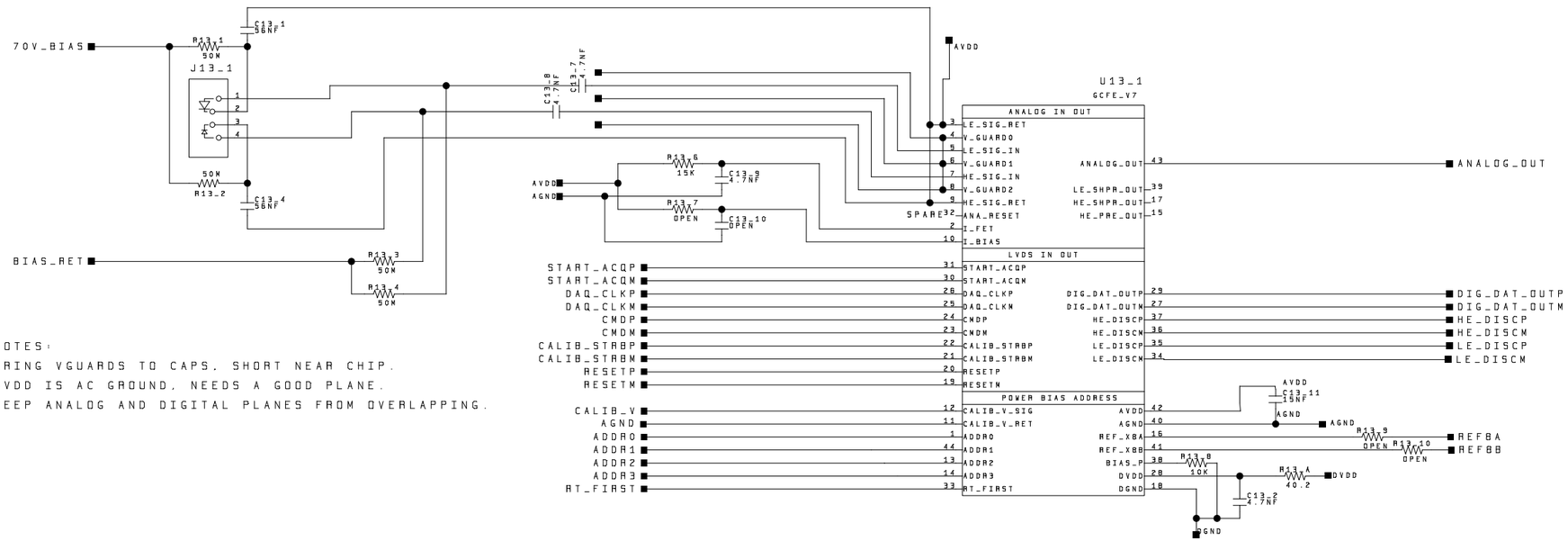

NOTES:

BRING VGUARDS TO CAPS. SHORT NEAR CHIP.

AVDD IS AC GROUND. NEEDS A GOOD PLANE.

KEEP ANALOG AND DIGITAL PLANES FROM OVERLAPPING.

STANFORD LINEAR ACCELERATOR CENTER
U.S. DEPARTMENT OF ENERGY
STANFORD UNIVERSITY STANFORD, CALIFORNIA

PROPRIETARY DATA OF STANFORD UNIVERSITY AND/OR U.S. DEPARTMENT OF ENERGY. RECIPIENT SHALL NOT PUBLISH THE INFORMATION WITHIN UNLESS GRANTED SPECIFIC PERMISSION OF STANFORD UNIVERSITY.

	DATE	APPROVALS
ENGR		
DFTR		
CHKR		

SHEET OF 57

SLAC - GLAST
AFEE X/Y BOARD
ONE GCFE

LAT-DS-03343/4-00 D

REV	DESCRIPTION	DFTR	CHKR	ENGR APPV	DATE

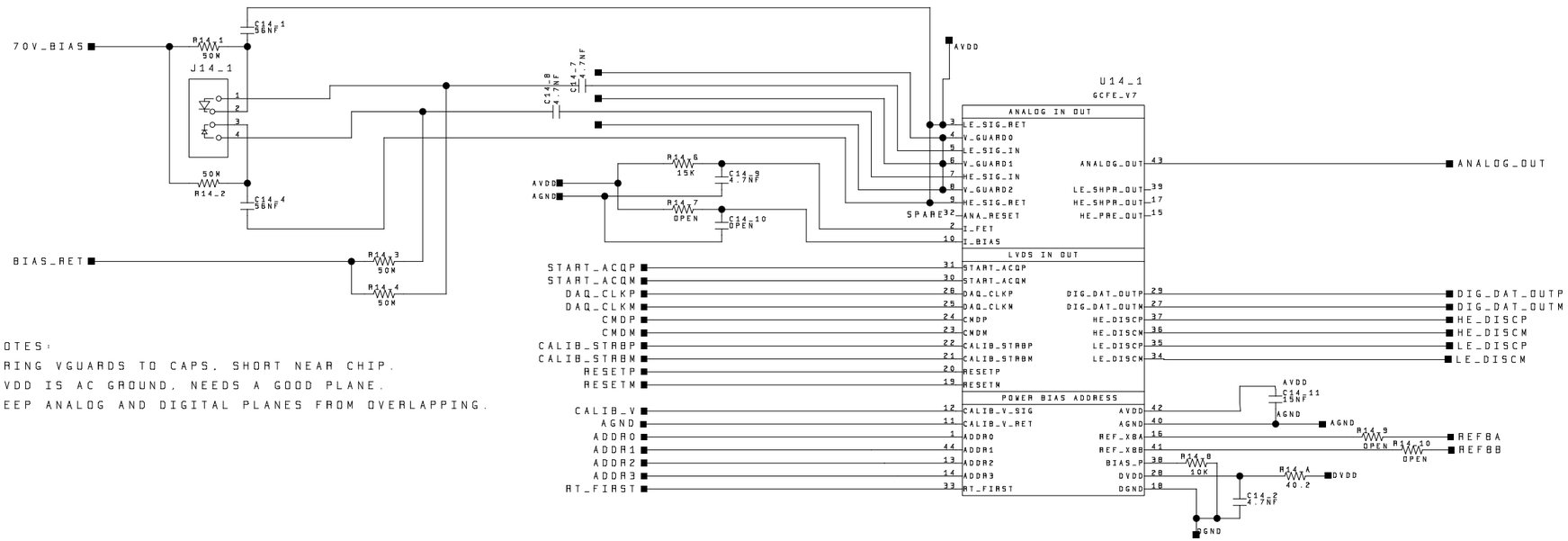

NOTES:

BRING VGUARDS TO CAPS. SHORT NEAR CHIP.

AVDD IS AC GROUND. NEEDS A GOOD PLANE.

KEEP ANALOG AND DIGITAL PLANES FROM OVERLAPPING.

STANFORD LINEAR ACCELERATOR CENTER
U.S. DEPARTMENT OF ENERGY
STANFORD UNIVERSITY STANFORD, CALIFORNIA

PROPRIETARY DATA OF STANFORD UNIVERSITY AND/OR U.S. DEPARTMENT OF ENERGY. RECIPIENT SHALL NOT PUBLISH THE INFORMATION WITHIN UNLESS GRANTED SPECIFIC PERMISSION OF STANFORD UNIVERSITY.

	DATE	APPROVALS
ENGR		
DFTR		
CHKR		

SLAC - GLAST
AFEE X/Y BOARD
ONE GCFE

LAT-DS-03343/4-00 D

REV	DESCRIPTION	DFTR	CHKR	ENGR APPV	DATE

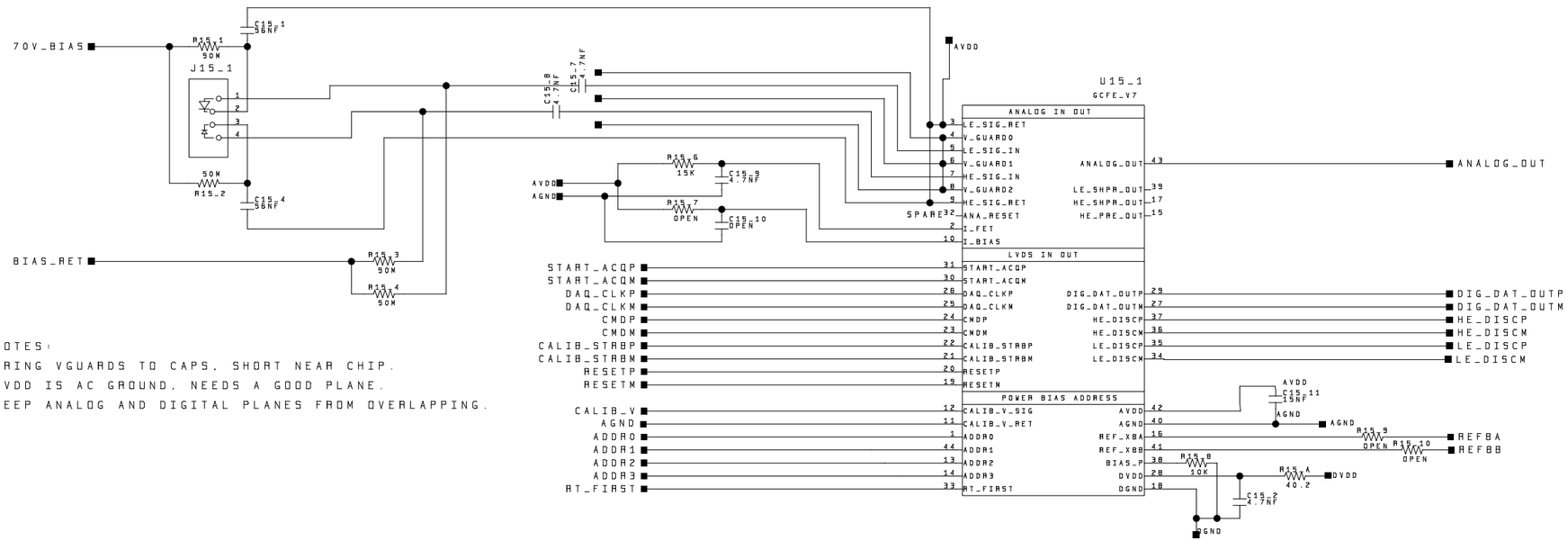

NOTES:

BRING VGUARDS TO CAPS, SHORT NEAR CHIP.

AVDD IS AC GROUND, NEEDS A GOOD PLANE.

KEEP ANALOG AND DIGITAL PLANES FROM OVERLAPPING.

STANFORD LINEAR ACCELERATOR CENTER
U.S. DEPARTMENT OF ENERGY
STANFORD UNIVERSITY STANFORD, CALIFORNIA

PROPRIETARY DATA OF STANFORD UNIVERSITY AND/OR U.S. DEPARTMENT OF ENERGY. RECIPIENT SHALL NOT PUBLISH THE INFORMATION WITHIN UNLESS GRANTED SPECIFIC PERMISSION OF STANFORD UNIVERSITY.

	DATE	APPROVALS
ENGR		
DFTR		
CHKR		

SLAC - GLAST
AFEE X/Y BOARD
ONE GCFE

LAT-DS-03343/4-00 D

REV	DESCRIPTION	DFTR	CHKR	ENGR APPV	DATE

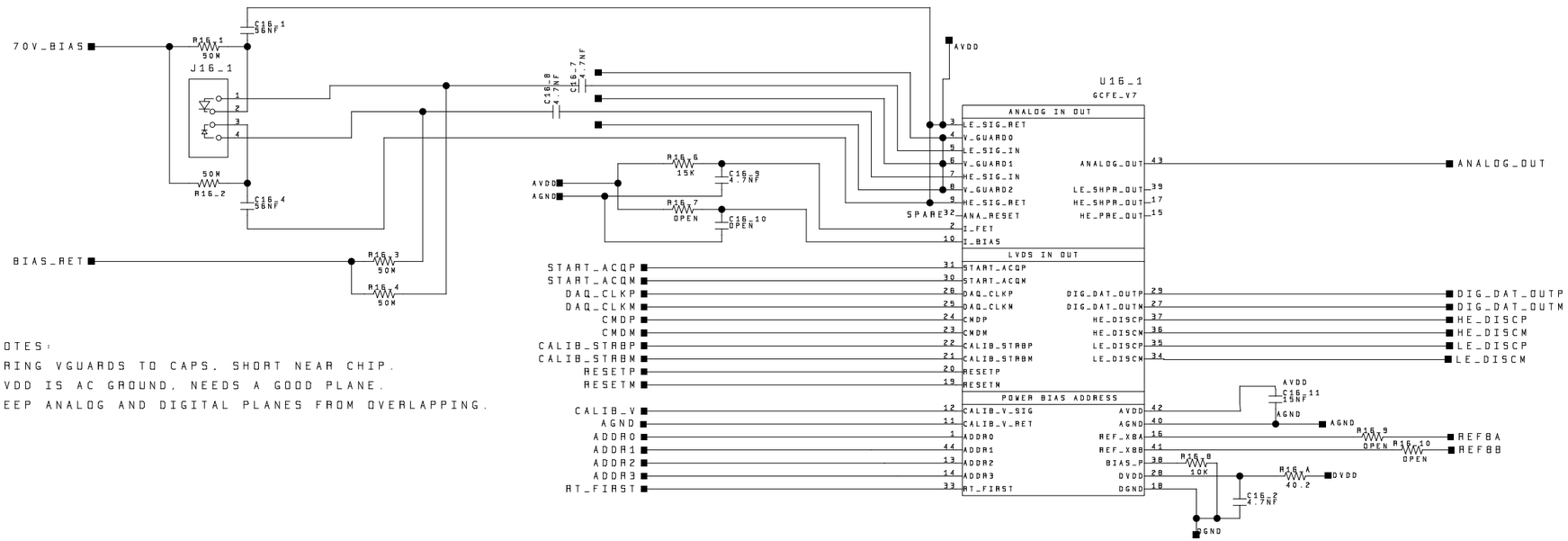

NOTES:

BRING VGUARDS TO CAPS, SHORT NEAR CHIP.

AVDD IS AC GROUND, NEEDS A GOOD PLANE.

KEEP ANALOG AND DIGITAL PLANES FROM OVERLAPPING.

STANFORD LINEAR ACCELERATOR CENTER
U.S. DEPARTMENT OF ENERGY
STANFORD UNIVERSITY STANFORD, CALIFORNIA

PROPRIETARY DATA OF STANFORD UNIVERSITY AND/OR U.S. DEPARTMENT OF ENERGY. RECIPIENT SHALL NOT PUBLISH THE INFORMATION WITHIN UNLESS GRANTED SPECIFIC PERMISSION OF STANFORD UNIVERSITY.

	DATE	APPROVALS
ENGR		
DFTR		
CHKR		

SLAC - GLAST
AFEE X/Y BOARD
ONE GCFE

LAT-DS-03343/4-00 D

REV	DESCRIPTION	DFTR	CHKR	ENGR APPV	DATE

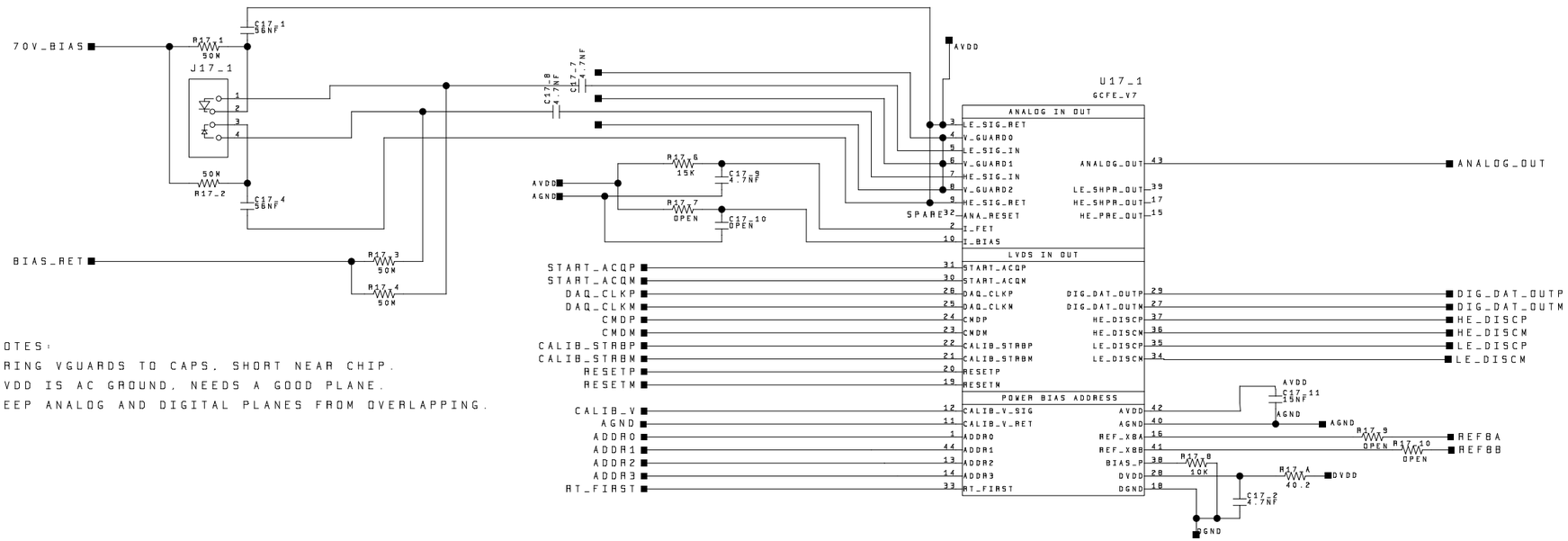

NOTES:

BRING VGUARDS TO CAPS. SHORT NEAR CHIP.

AVDD IS AC GROUND. NEEDS A GOOD PLANE.

KEEP ANALOG AND DIGITAL PLANES FROM OVERLAPPING.

STANFORD LINEAR ACCELERATOR CENTER
U.S. DEPARTMENT OF ENERGY
STANFORD UNIVERSITY STANFORD, CALIFORNIA

PROPRIETARY DATA OF STANFORD UNIVERSITY AND/OR U.S. DEPARTMENT OF ENERGY. RECIPIENT SHALL NOT PUBLISH THE INFORMATION WITHIN UNLESS GRANTED SPECIFIC PERMISSION OF STANFORD UNIVERSITY.

	DATE	APPROVALS
ENGR		
DFTR		
CHKR		

SLAC - GLAST
AFEE X/Y BOARD
ONE GCFE

LAT-DS-03343/4-00 D

REV	DESCRIPTION	DFTR	CHKR	ENGR APPV	DATE

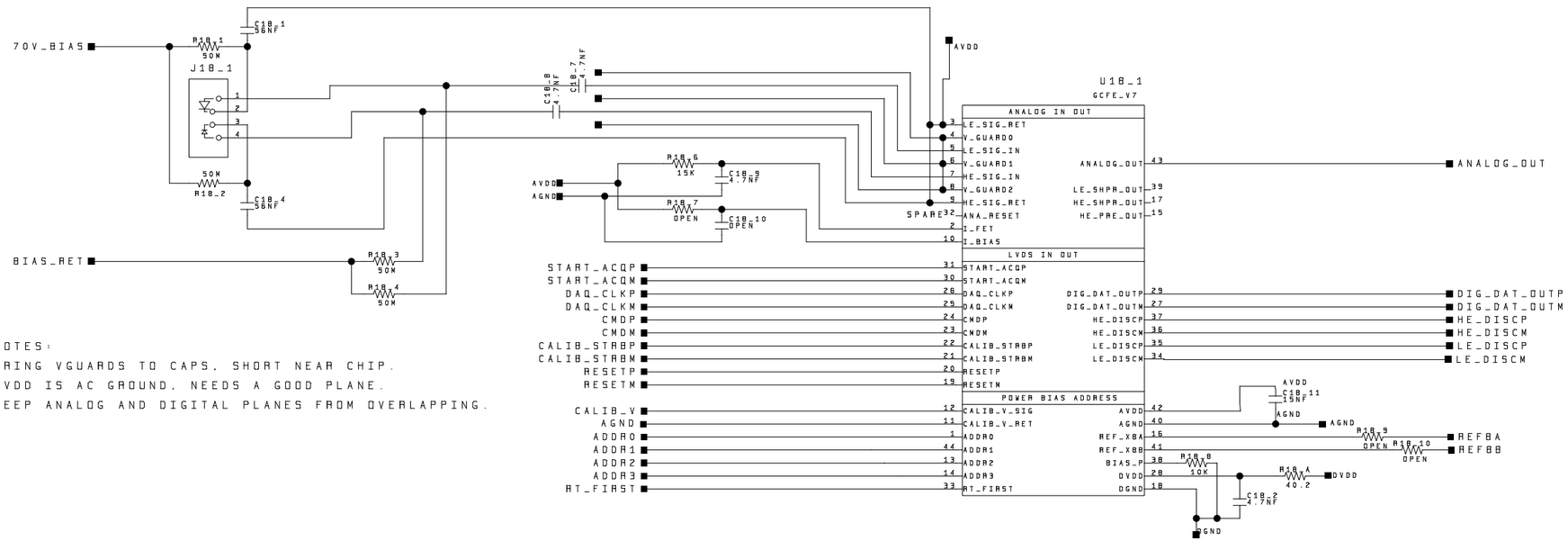

NOTES:

BRING VGUARDS TO CAPS, SHORT NEAR CHIP.

AVDD IS AC GROUND, NEEDS A GOOD PLANE.

KEEP ANALOG AND DIGITAL PLANES FROM OVERLAPPING.

STANFORD LINEAR ACCELERATOR CENTER
U.S. DEPARTMENT OF ENERGY
STANFORD UNIVERSITY STANFORD, CALIFORNIA

PROPRIETARY DATA OF STANFORD UNIVERSITY AND/OR U.S. DEPARTMENT OF ENERGY. RECIPIENT SHALL NOT PUBLISH THE INFORMATION WITHIN UNLESS GRANTED SPECIFIC PERMISSION OF STANFORD UNIVERSITY.

	DATE	APPROVALS
ENGR		
DFTR		
CHKR		

SLAC - GLAST
AFEE X/Y BOARD
ONE GCFE

LAT-DS-03343/4-00 D

REV	DESCRIPTION	DFTR	CHKR	ENGR APPV	DATE

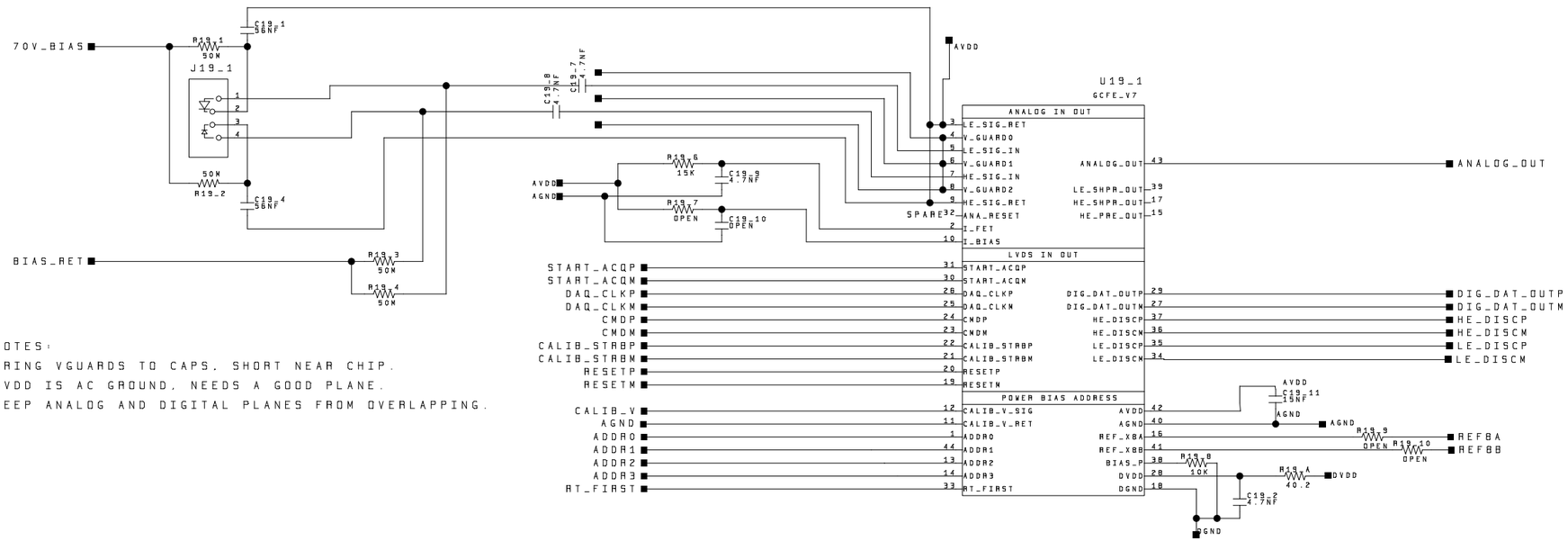

NOTES:

BRING VGUARDS TO CAPS. SHORT NEAR CHIP.

AVDD IS AC GROUND. NEEDS A GOOD PLANE.

KEEP ANALOG AND DIGITAL PLANES FROM OVERLAPPING.

STANFORD LINEAR ACCELERATOR CENTER
U.S. DEPARTMENT OF ENERGY
STANFORD UNIVERSITY STANFORD, CALIFORNIA

PROPRIETARY DATA OF STANFORD UNIVERSITY AND/OR U.S. DEPARTMENT OF ENERGY. RECIPIENT SHALL NOT PUBLISH THE INFORMATION WITHIN UNLESS GRANTED SPECIFIC PERMISSION OF STANFORD UNIVERSITY.

	DATE	APPROVALS
ENGR		
DFTR		
CHKR		

SLAC - GLAST
AFEE X/Y BOARD
ONE GCFE

LAT-DS-03343/4-00 D

REV	DESCRIPTION	DFTR	CHKR	ENGR APPV	DATE

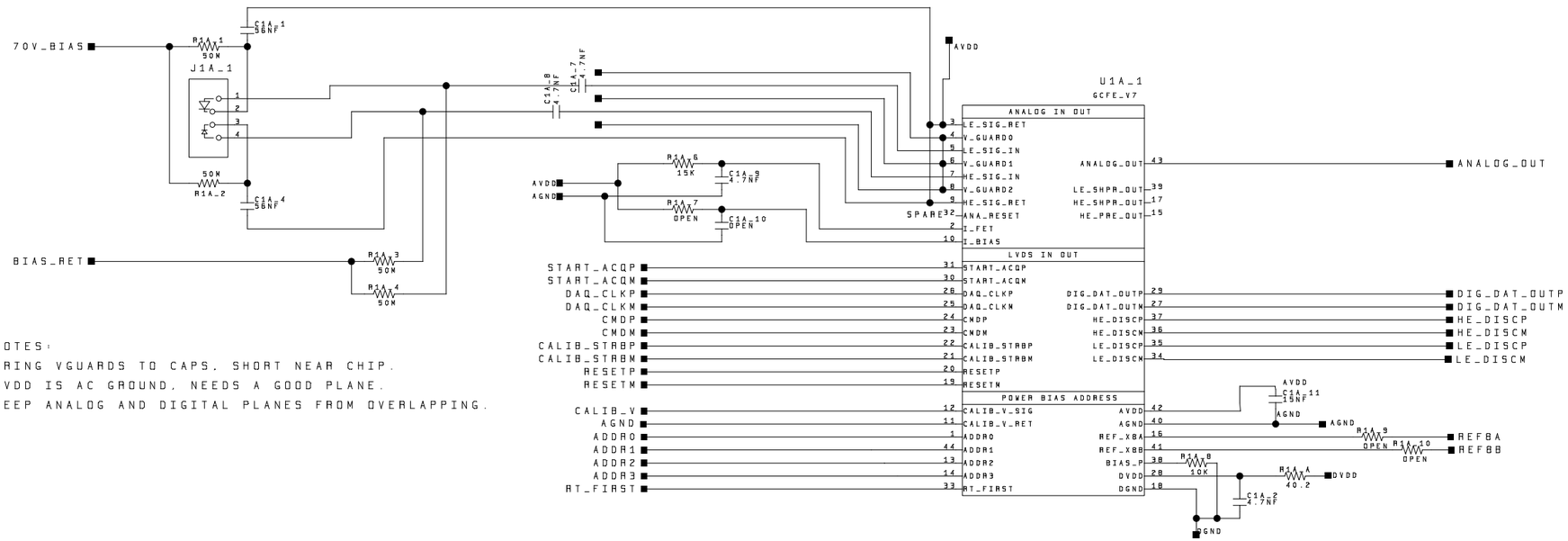

NOTES:

BRING VGUARDS TO CAPS, SHORT NEAR CHIP.

AVDD IS AC GROUND, NEEDS A GOOD PLANE.

KEEP ANALOG AND DIGITAL PLANES FROM OVERLAPPING.

STANFORD LINEAR ACCELERATOR CENTER
U.S. DEPARTMENT OF ENERGY
STANFORD UNIVERSITY STANFORD, CALIFORNIA

PROPRIETARY DATA OF STANFORD UNIVERSITY AND/OR U.S. DEPARTMENT OF ENERGY. RECIPIENT SHALL NOT PUBLISH THE INFORMATION WITHIN UNLESS GRANTED SPECIFIC PERMISSION OF STANFORD UNIVERSITY.

	DATE	APPROVALS
ENGR		
DFTR		
CHKR		

SLAC - GLAST
AFEE X/Y BOARD
ONE GCFE

LAT-DS-03343/4-00 D

REV	DESCRIPTION	DFTR	CHKR	ENGR APPV	DATE

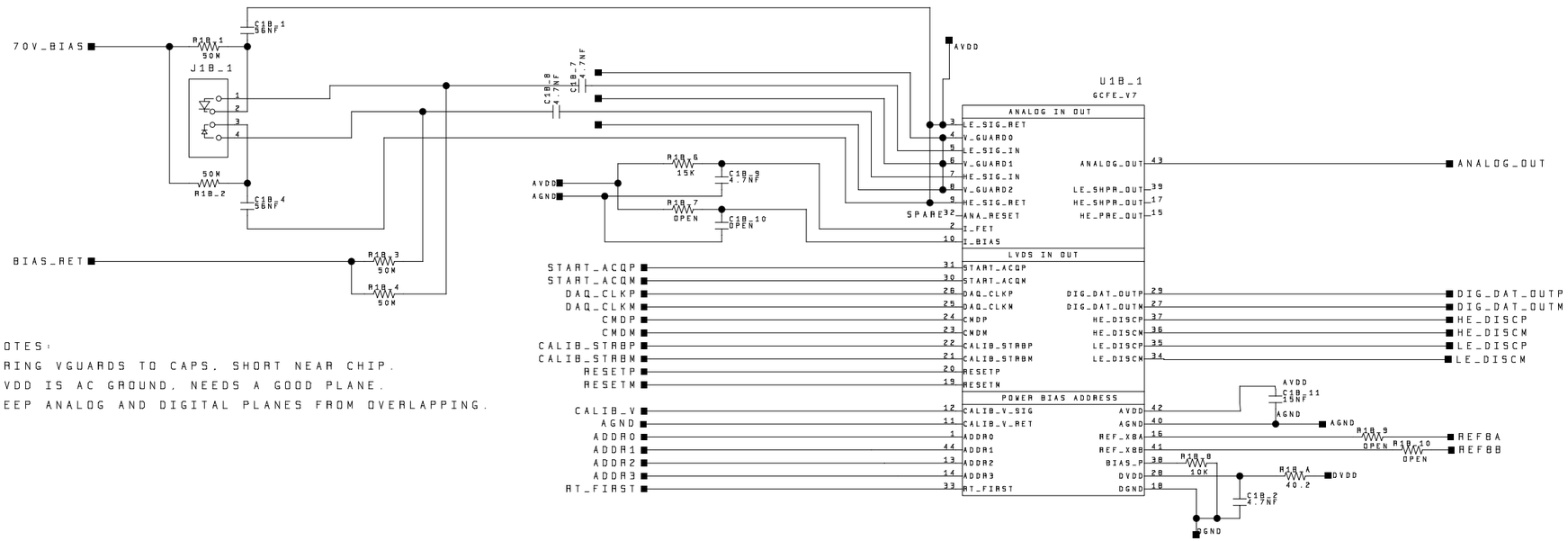

NOTES:

BRING VGUARDS TO CAPS, SHORT NEAR CHIP.

AVDD IS AC GROUND, NEEDS A GOOD PLANE.

KEEP ANALOG AND DIGITAL PLANES FROM OVERLAPPING.

STANFORD LINEAR ACCELERATOR CENTER
U.S. DEPARTMENT OF ENERGY
STANFORD UNIVERSITY STANFORD, CALIFORNIA

PROPRIETARY DATA OF STANFORD UNIVERSITY AND/OR U.S. DEPARTMENT OF ENERGY. RECIPIENT SHALL NOT PUBLISH THE INFORMATION WITHIN UNLESS GRANTED SPECIFIC PERMISSION OF STANFORD UNIVERSITY.

	DATE	APPROVALS
ENGR		
DFTR		
CHKR		

SHEET OF 57

SLAC - GLAST
AFEE X/Y BOARD
ONE GCFE

LAT-DS-03343/4-00 D

REV	DESCRIPTION	DFTR	CHKR	ENGR APPV	DATE

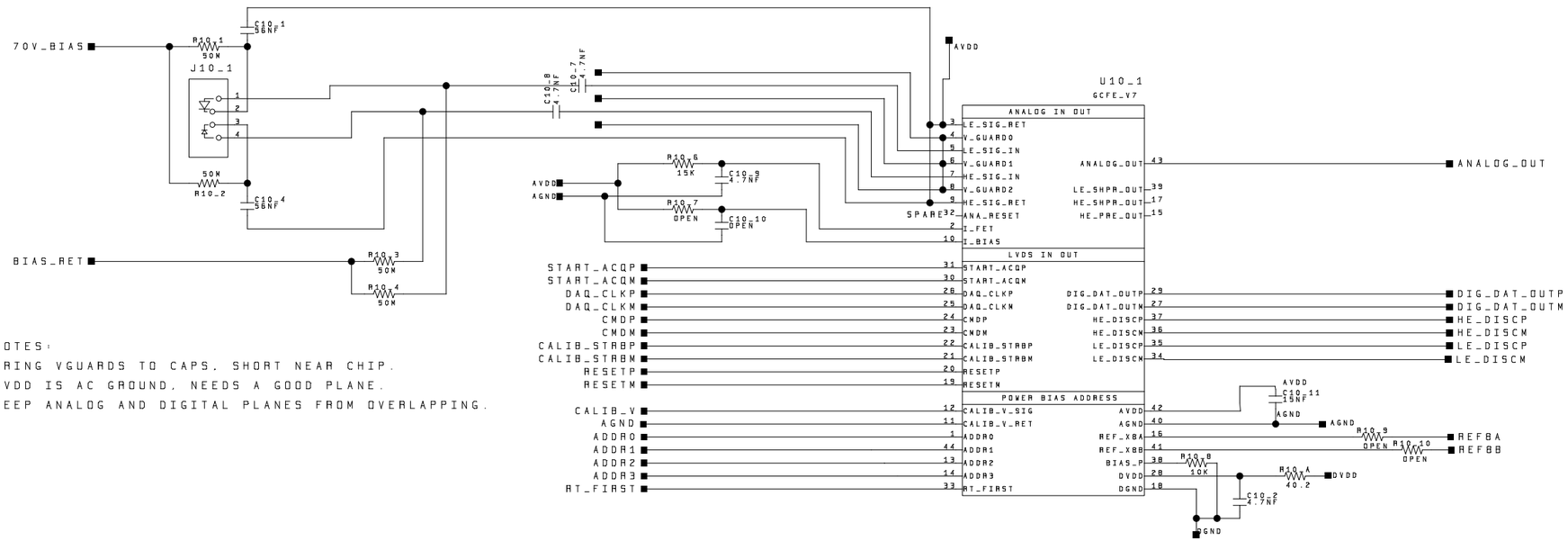

NOTES:

BRING VGUARDS TO CAPS, SHORT NEAR CHIP.

AVDD IS AC GROUND, NEEDS A GOOD PLANE.

KEEP ANALOG AND DIGITAL PLANES FROM OVERLAPPING.

STANFORD LINEAR ACCELERATOR CENTER
U.S. DEPARTMENT OF ENERGY
STANFORD UNIVERSITY STANFORD, CALIFORNIA

PROPRIETARY DATA OF STANFORD UNIVERSITY AND/OR U.S. DEPARTMENT OF ENERGY. RECIPIENT SHALL NOT PUBLISH THE INFORMATION WITHIN UNLESS GRANTED SPECIFIC PERMISSION OF STANFORD UNIVERSITY.

	DATE	APPROVALS
ENGR		
DFTR		
CHKR		

SHEET OF 57

SLAC - GLAST
AFEE X/Y BOARD
ONE GCFE

LAT-DS-03343/4-00 D

REV	DESCRIPTION	DFTR	CHKR	ENGR APPV	DATE

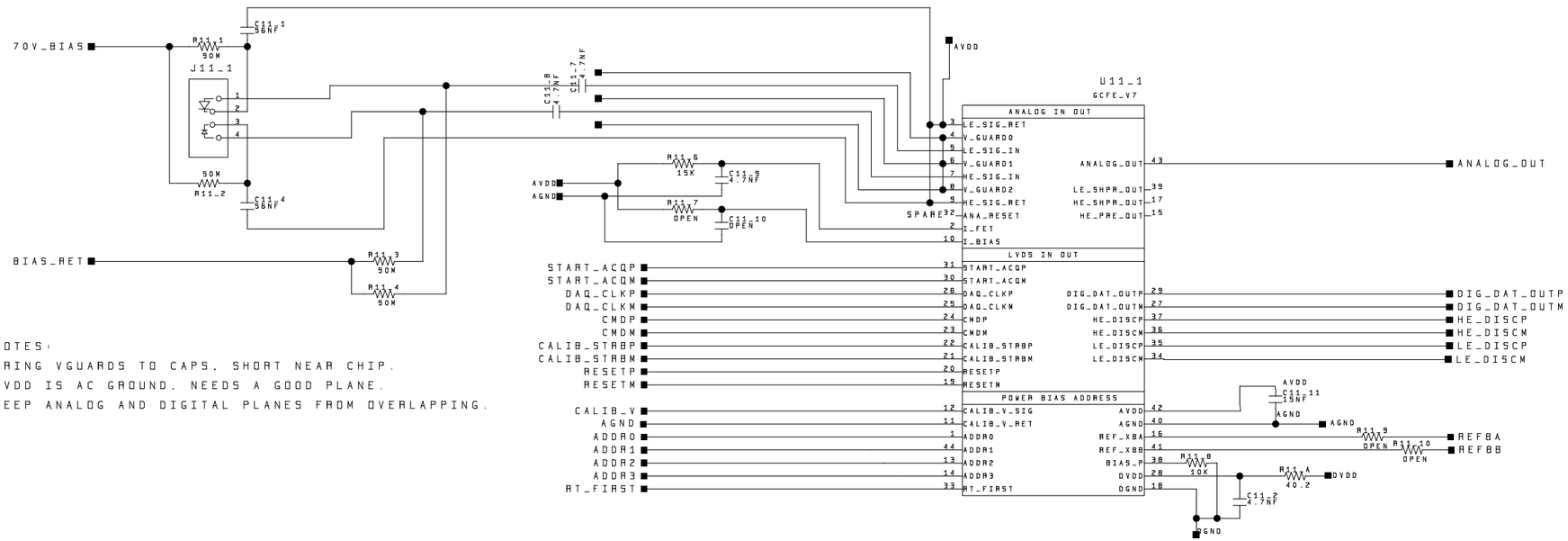

NOTES:

BRING VGUARDS TO CAPS. SHORT NEAR CHIP.

AVDD IS AC GROUND. NEEDS A GOOD PLANE.

KEEP ANALOG AND DIGITAL PLANES FROM OVERLAPPING.

STANFORD LINEAR ACCELERATOR CENTER
U.S. DEPARTMENT OF ENERGY
STANFORD UNIVERSITY STANFORD, CALIFORNIA

PROPRIETARY DATA OF STANFORD UNIVERSITY AND/OR U.S. DEPARTMENT OF ENERGY. RECIPIENT SHALL NOT PUBLISH THE INFORMATION WITHIN UNLESS GRANTED SPECIFIC PERMISSION OF STANFORD UNIVERSITY.

	DATE	APPROVALS
ENGR		
DFTR		
CHKR		

SHEET OF 57

SLAC - GLAST
AFEE X/Y BOARD
ONE GCFE

LAT-DS-03343/4-00 D

REV	DESCRIPTION	DFTR	CHKR	ENGR APPV	DATE

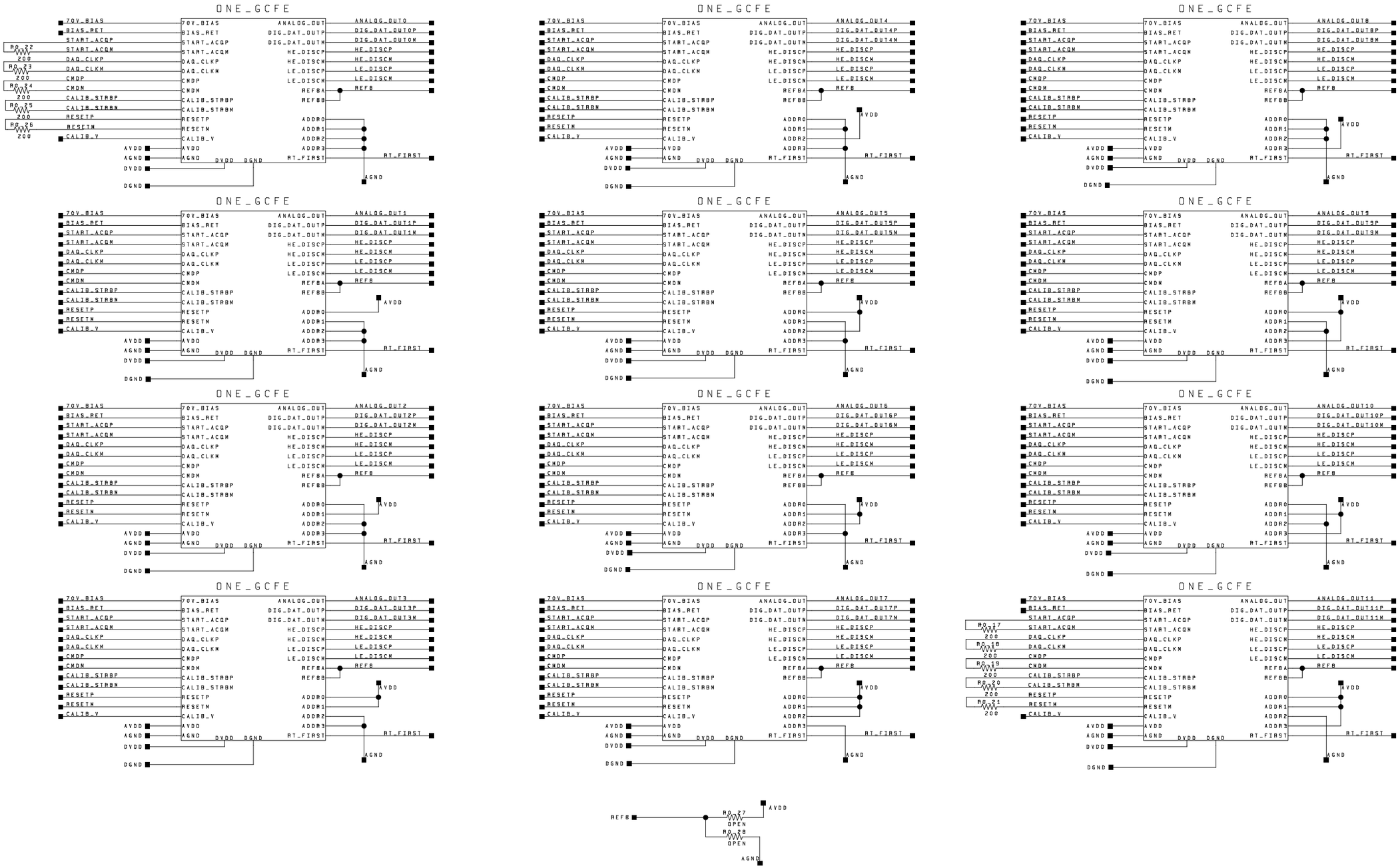

STANFORD LINEAR ACCELERATOR CENTER
U.S. DEPARTMENT OF ENERGY
STANFORD UNIVERSITY STANFORD, CALIFORNIA

PROPRIETARY DATA OF STANFORD UNIVERSITY AND/OR U.S. DEPARTMENT OF ENERGY. RECIPIENT SHALL NOT PUBLISH THE INFORMATION WITHIN UNLESS GRANTED SPECIFIC PERMISSION OF STANFORD UNIVERSITY.

	DATE	APPROVALS
ENGR		
DFTR		
CHKR		

SLAC - GLAST
AFEE X/Y BOARD
TWELVE GCFE's

LAT-DS-03343/4-00 D

REV	DESCRIPTION	DFTR	CHKR	ENGR APPV	DATE

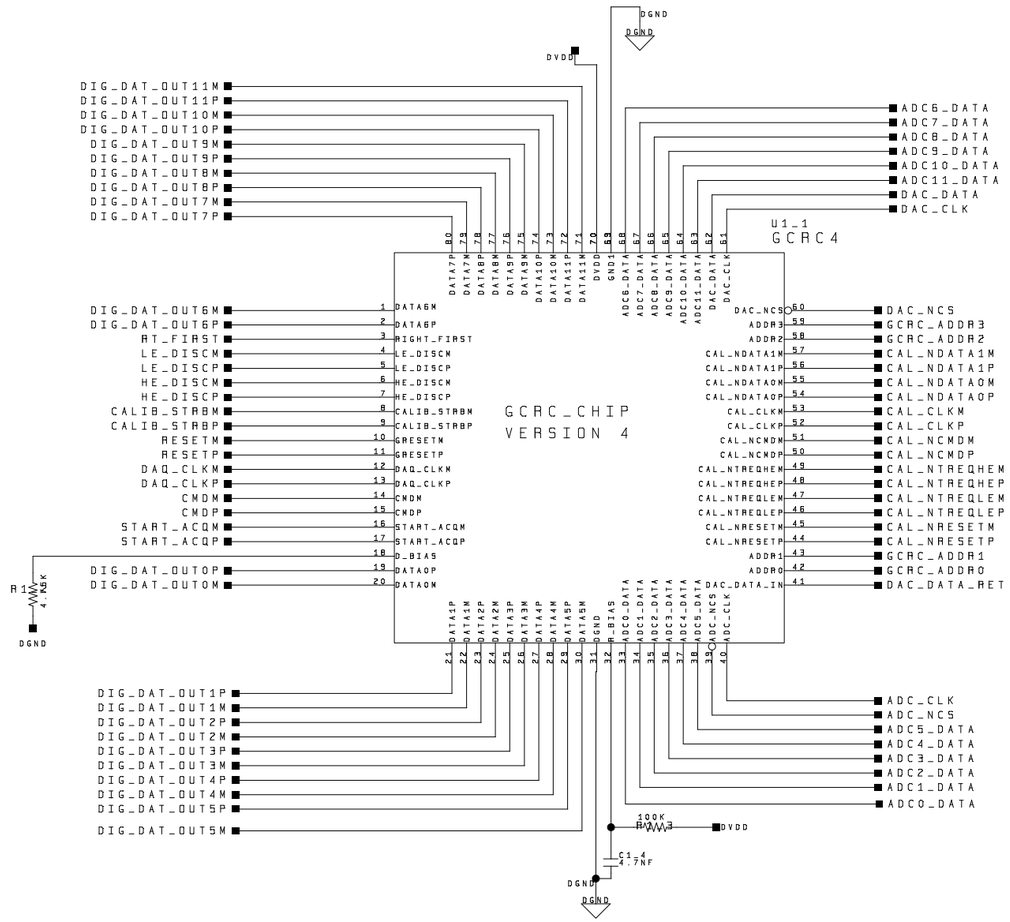

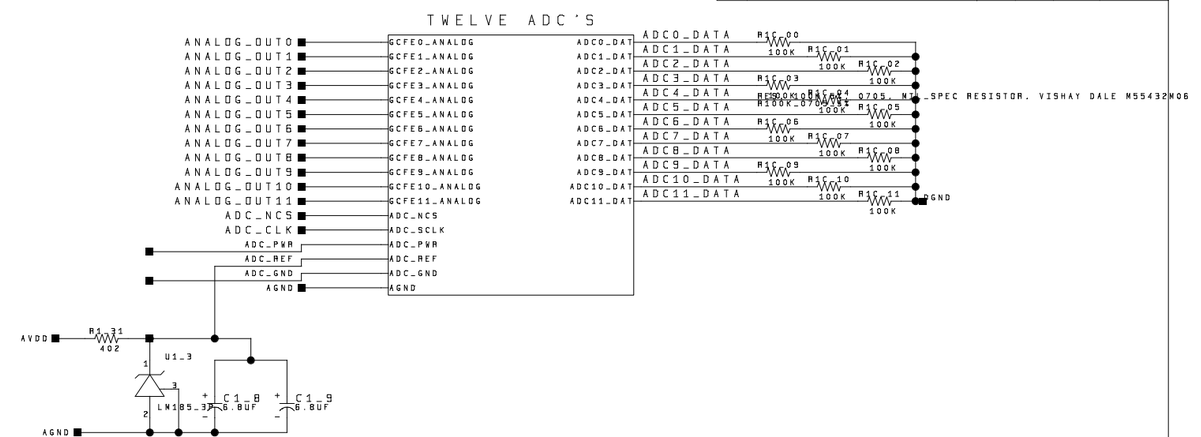

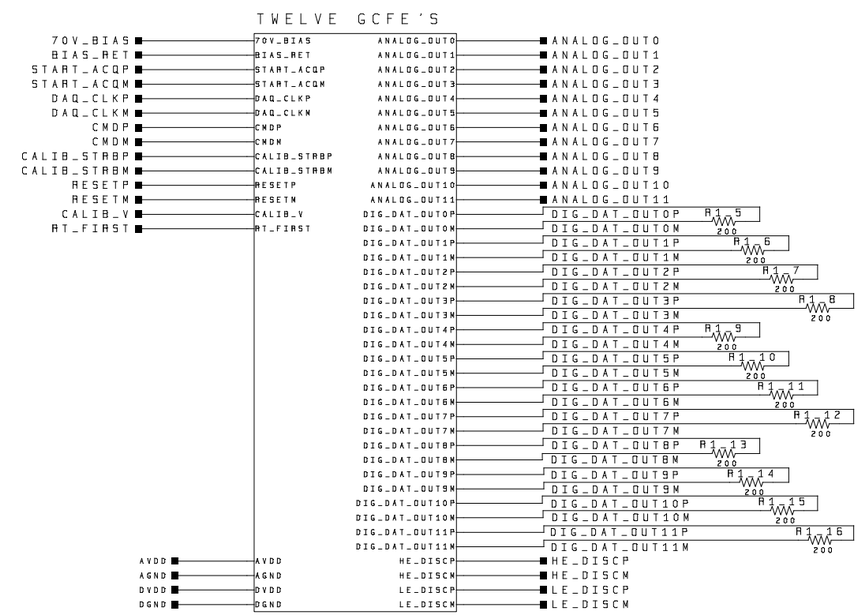

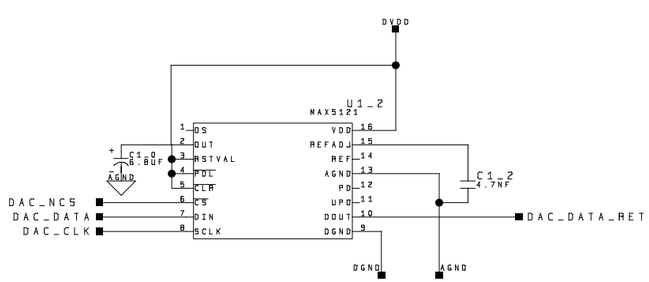

STANFORD LINEAR ACCELERATOR CENTER
U.S. DEPARTMENT OF ENERGY
STANFORD UNIVERSITY STANFORD, CALIFORNIA

PROPRIETARY DATA OF STANFORD UNIVERSITY AND/OR U.S. DEPARTMENT OF ENERGY. RECIPIENT SHALL NOT PUBLISH THE INFORMATION WITHIN UNLESS GRANTED SPECIFIC PERMISSION OF STANFORD UNIVERSITY.

	DATE	APPROVALS
ENGR		
DFTR		
CHKR		

SLAC - GLAST
AFEE X/Y BOARD
ONE ROW
AFEE X: LAT-DS-03342
AFEE Y: LAT-DS-03343

LAT-DS-03343/4-00 D

REV	DESCRIPTION	DFTR	CHKR	ENGR APPV	DATE

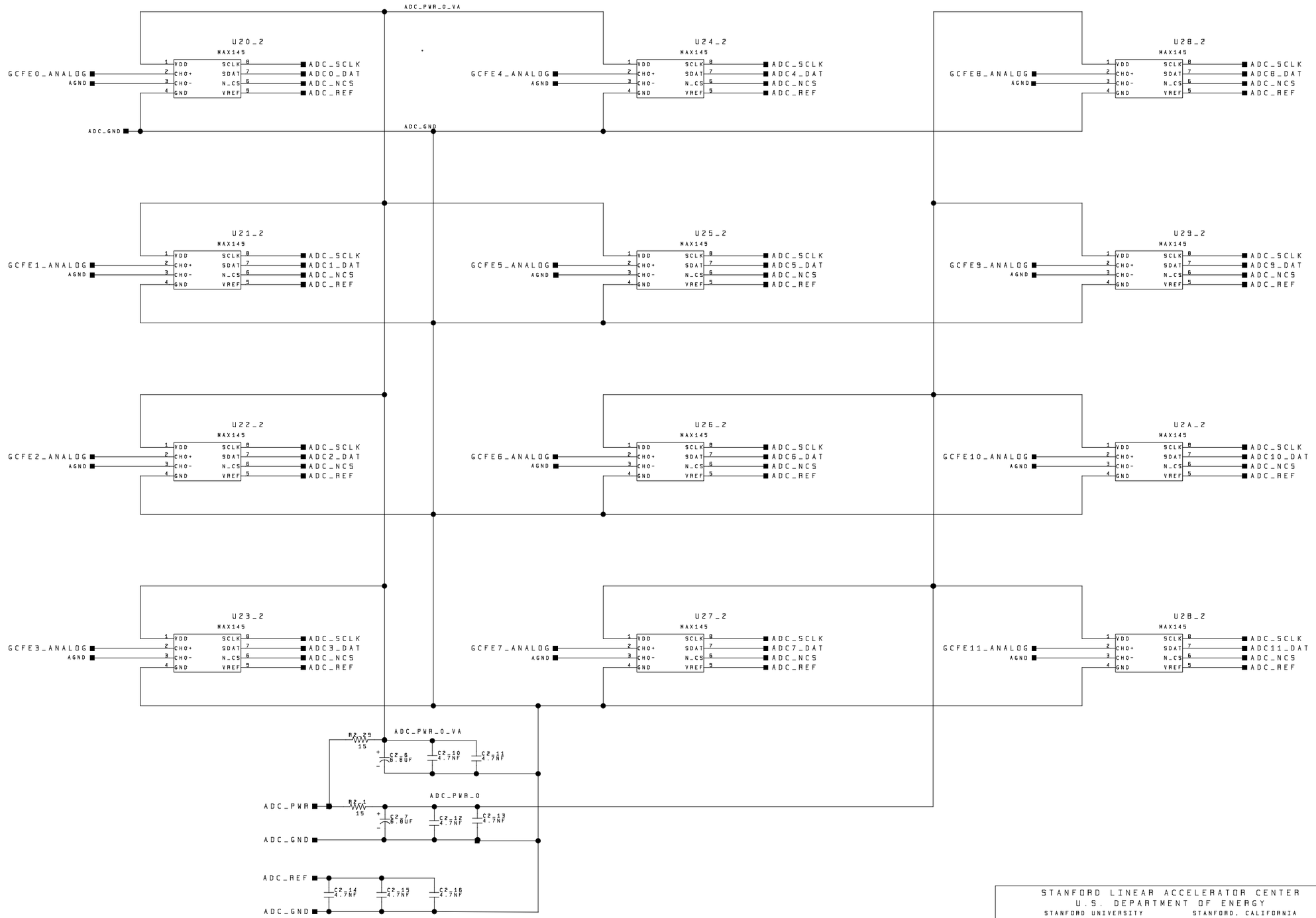

STANFORD LINEAR ACCELERATOR CENTER
U.S. DEPARTMENT OF ENERGY
STANFORD UNIVERSITY STANFORD, CALIFORNIA

PROPRIETARY DATA OF STANFORD UNIVERSITY AND/OR U.S. DEPARTMENT OF ENERGY. RECIPIENT SHALL NOT PUBLISH THE INFORMATION WITHIN UNLESS GRANTED SPECIFIC PERMISSION OF STANFORD UNIVERSITY.

	DATE	APPROVALS
ENGR		
DFTR		
CHKR		

SLAC - GLAST
AFEE X/Y BOARD
TWELVE ADC'S

LAT-DS-03343/4-00 D

REV	DESCRIPTION	DFTR	CHKR	ENGR APPV	DATE

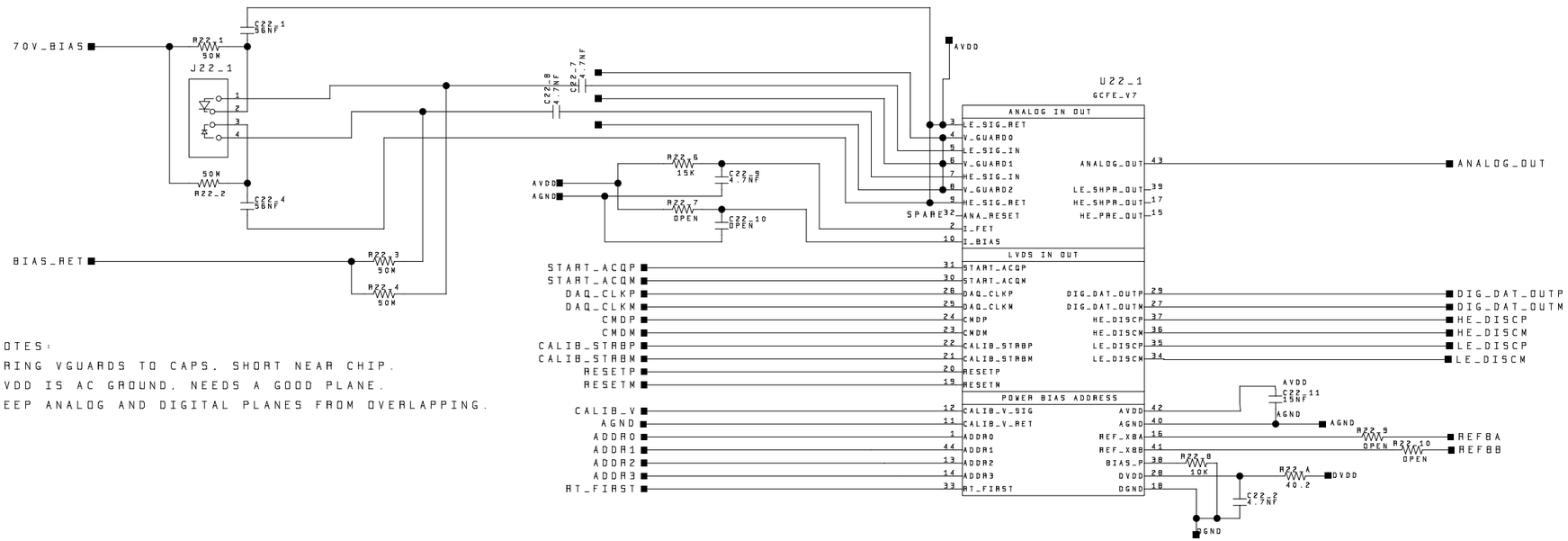

NOTES:

BRING VGUARDS TO CAPS, SHORT NEAR CHIP.

AVDD IS AC GROUND, NEEDS A GOOD PLANE.

KEEP ANALOG AND DIGITAL PLANES FROM OVERLAPPING.

STANFORD LINEAR ACCELERATOR CENTER
U.S. DEPARTMENT OF ENERGY
STANFORD UNIVERSITY STANFORD, CALIFORNIA

PROPRIETARY DATA OF STANFORD UNIVERSITY AND/OR U.S. DEPARTMENT OF ENERGY. RECIPIENT SHALL NOT PUBLISH THE INFORMATION WITHIN UNLESS GRANTED SPECIFIC PERMISSION OF STANFORD UNIVERSITY.

	DATE	APPROVALS
ENGR		
DFTR		
CHKR		

SLAC - GLAST
AFEE X/Y BOARD
ONE GCFE

LAT-DS-03343/4-00 D

REV	DESCRIPTION	DFTR	CHKR	ENGR APPV	DATE

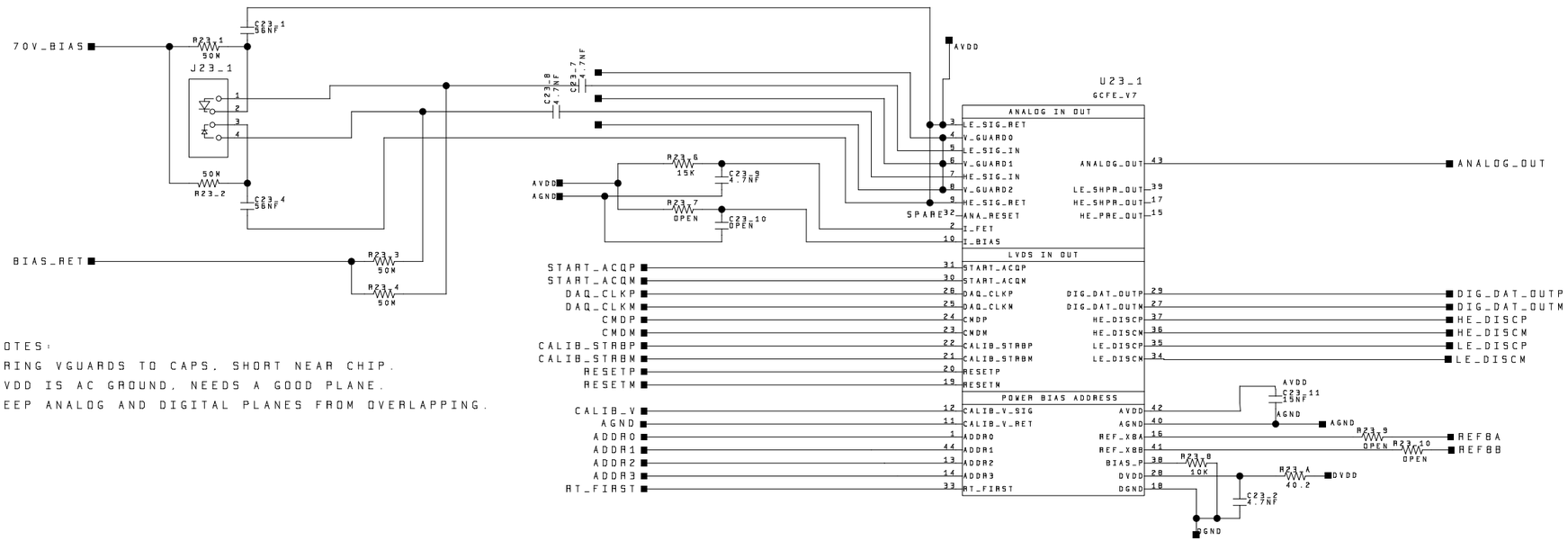

NOTES:

BRING VGUARDS TO CAPS, SHORT NEAR CHIP.

AVDD IS AC GROUND, NEEDS A GOOD PLANE.

KEEP ANALOG AND DIGITAL PLANES FROM OVERLAPPING.

STANFORD LINEAR ACCELERATOR CENTER
U.S. DEPARTMENT OF ENERGY
STANFORD UNIVERSITY STANFORD, CALIFORNIA

PROPRIETARY DATA OF STANFORD UNIVERSITY AND/OR U.S. DEPARTMENT OF ENERGY. RECIPIENT SHALL NOT PUBLISH THE INFORMATION WITHIN UNLESS GRANTED SPECIFIC PERMISSION OF STANFORD UNIVERSITY.

	DATE	APPROVALS
ENGR		
DFTR		
CHKR		

SLAC - GLAST
AFEE X/Y BOARD
ONE GCFE

LAT-DS-03343/4-00 D

REV	DESCRIPTION	DFTR	CHKR	ENGR APPV	DATE

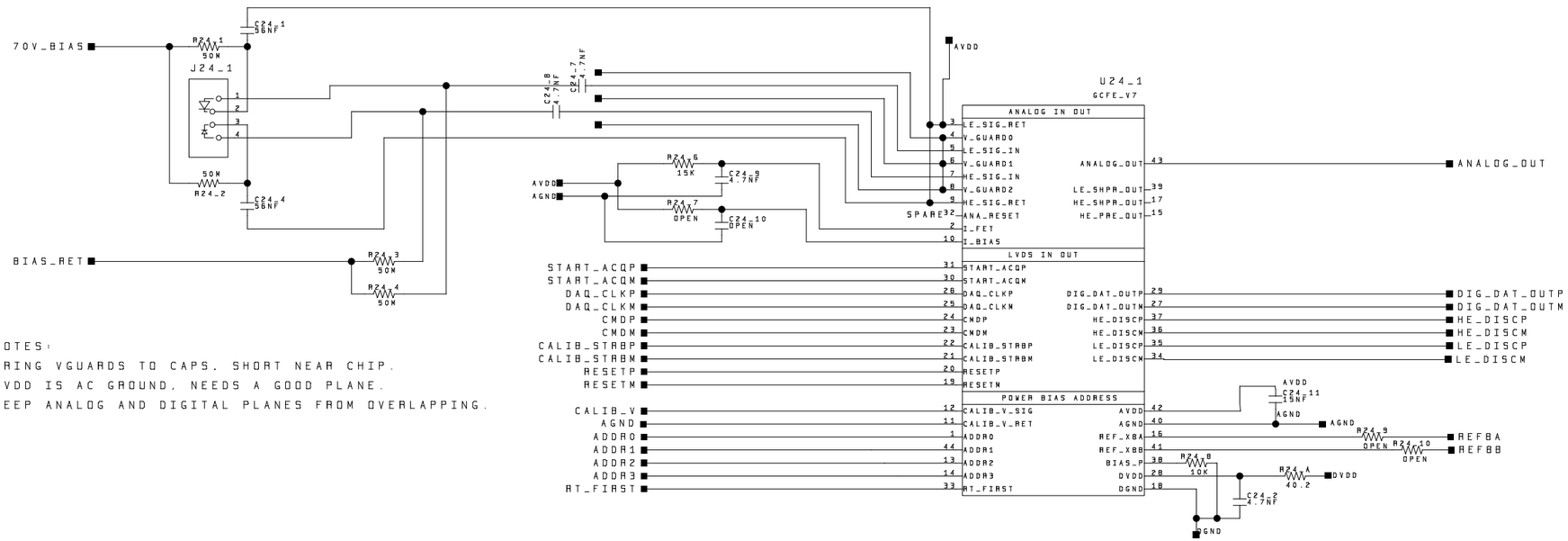

NOTES:

BRING VGUARDS TO CAPS. SHORT NEAR CHIP.

AVDD IS AC GROUND. NEEDS A GOOD PLANE.

KEEP ANALOG AND DIGITAL PLANES FROM OVERLAPPING.

STANFORD LINEAR ACCELERATOR CENTER
U.S. DEPARTMENT OF ENERGY
STANFORD UNIVERSITY STANFORD, CALIFORNIA

PROPRIETARY DATA OF STANFORD UNIVERSITY AND/OR U.S. DEPARTMENT OF ENERGY. RECIPIENT SHALL NOT PUBLISH THE INFORMATION WITHIN UNLESS GRANTED SPECIFIC PERMISSION OF STANFORD UNIVERSITY.

	DATE	APPROVALS
ENGR		
DFTR		
CHKR		

SLAC - GLAST
AFEE X/Y BOARD
ONE GCFE

LAT-DS-03343/4-00 D

REV	DESCRIPTION	DFTR	CHKR	ENGR APPV	DATE

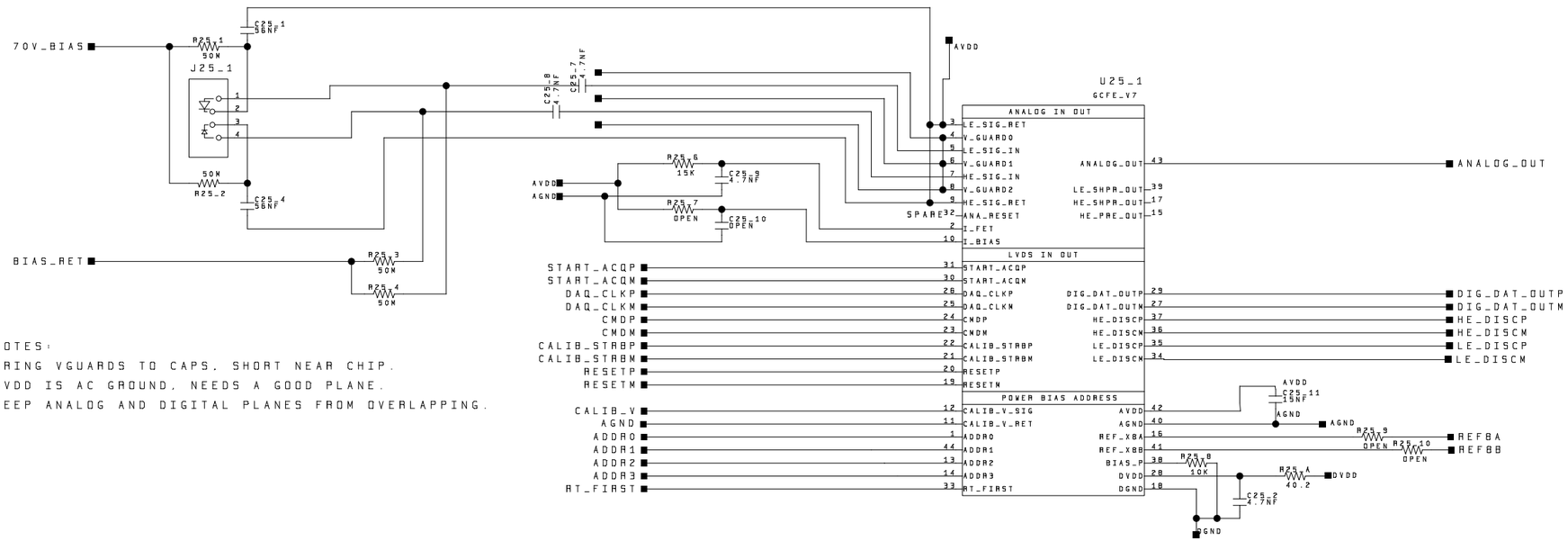

NOTES:

BRING VGUARDS TO CAPS, SHORT NEAR CHIP.

AVDD IS AC GROUND, NEEDS A GOOD PLANE.

KEEP ANALOG AND DIGITAL PLANES FROM OVERLAPPING.

STANFORD LINEAR ACCELERATOR CENTER
U.S. DEPARTMENT OF ENERGY
STANFORD UNIVERSITY STANFORD, CALIFORNIA

PROPRIETARY DATA OF STANFORD UNIVERSITY AND/OR U.S. DEPARTMENT OF ENERGY. RECIPIENT SHALL NOT PUBLISH THE INFORMATION WITHIN UNLESS GRANTED SPECIFIC PERMISSION OF STANFORD UNIVERSITY.

	DATE	APPROVALS
ENGR		
DFTR		
CHKR		

SLAC - GLAST
AFEE X/Y BOARD
ONE GCFE

LAT-DS-03343/4-00 D

REV	DESCRIPTION	DFTR	CHKR	ENGR APPV	DATE

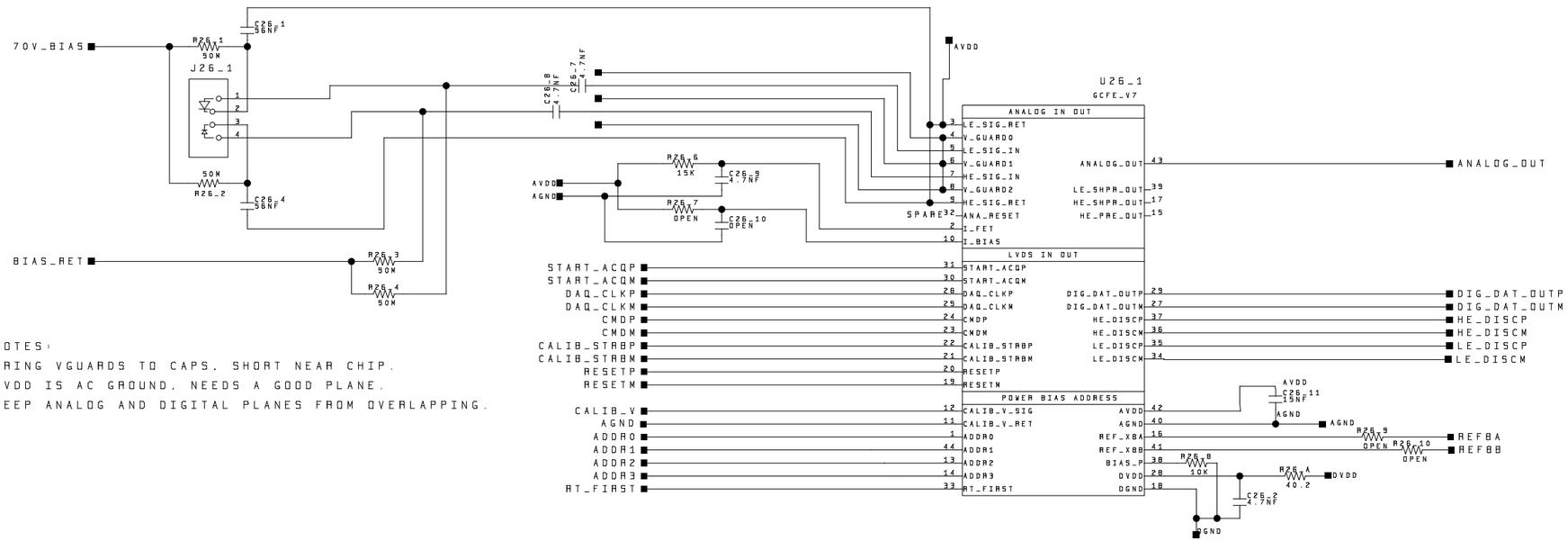

NOTES:

BRING VGUARDS TO CAPS, SHORT NEAR CHIP.

AVDD IS AC GROUND, NEEDS A GOOD PLANE.

KEEP ANALOG AND DIGITAL PLANES FROM OVERLAPPING.

STANFORD LINEAR ACCELERATOR CENTER
U.S. DEPARTMENT OF ENERGY
STANFORD UNIVERSITY STANFORD, CALIFORNIA

PROPRIETARY DATA OF STANFORD UNIVERSITY AND/OR U.S. DEPARTMENT OF ENERGY. RECIPIENT SHALL NOT PUBLISH THE INFORMATION WITHIN UNLESS GRANTED SPECIFIC PERMISSION OF STANFORD UNIVERSITY.

	DATE	APPROVALS
ENGR		
DFTR		
CHKR		

SLAC - GLAST
AFEE X/Y BOARD
ONE GCFE

LAT-DS-03343/4-00 D

REV	DESCRIPTION	DFTR	CHKR	ENGR APPV	DATE

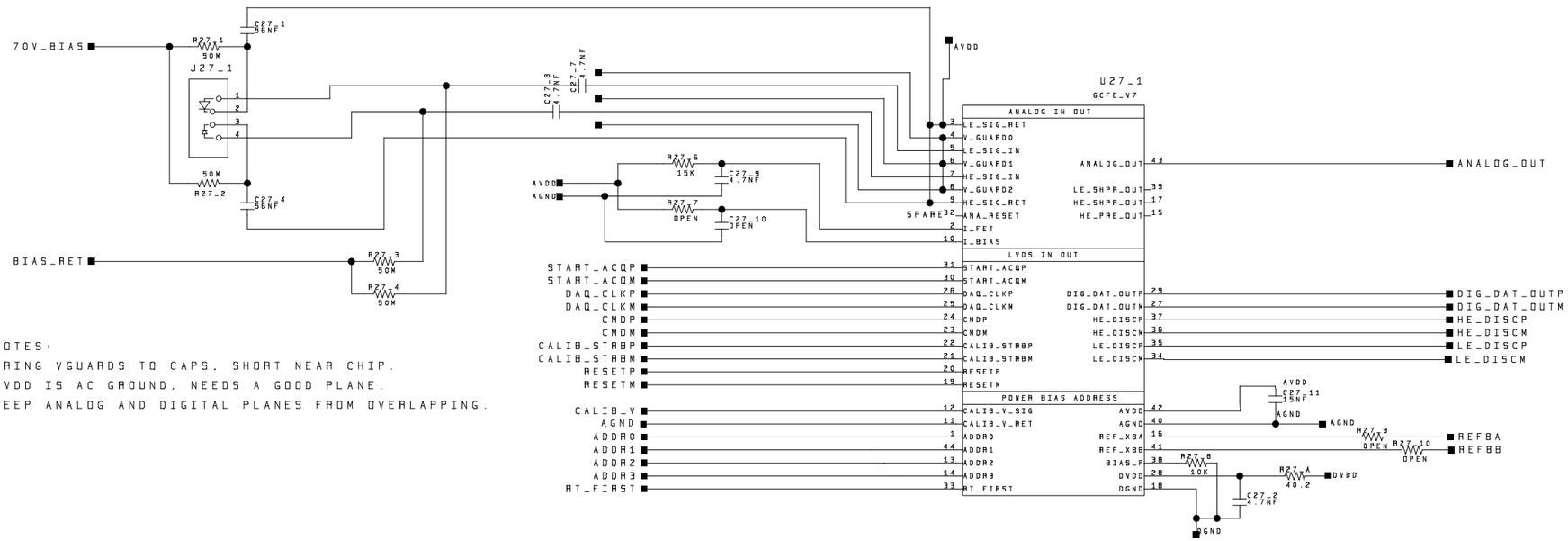

NOTES:

BRING VGUARDS TO CAPS. SHORT NEAR CHIP.

AVDD IS AC GROUND. NEEDS A GOOD PLANE.

KEEP ANALOG AND DIGITAL PLANES FROM OVERLAPPING.

STANFORD LINEAR ACCELERATOR CENTER
U.S. DEPARTMENT OF ENERGY
STANFORD UNIVERSITY STANFORD, CALIFORNIA

PROPRIETARY DATA OF STANFORD UNIVERSITY AND/OR U.S. DEPARTMENT OF ENERGY. RECIPIENT SHALL NOT PUBLISH THE INFORMATION WITHIN UNLESS GRANTED SPECIFIC PERMISSION OF STANFORD UNIVERSITY.

	DATE	APPROVALS
ENGR		
DFTR		
CHKR		

SLAC - GLAST
AFEE X/Y BOARD
ONE GCFE

LAT-DS-03343/4-00 D

REV	DESCRIPTION	DFTR	CHKR	ENGR APPV	DATE

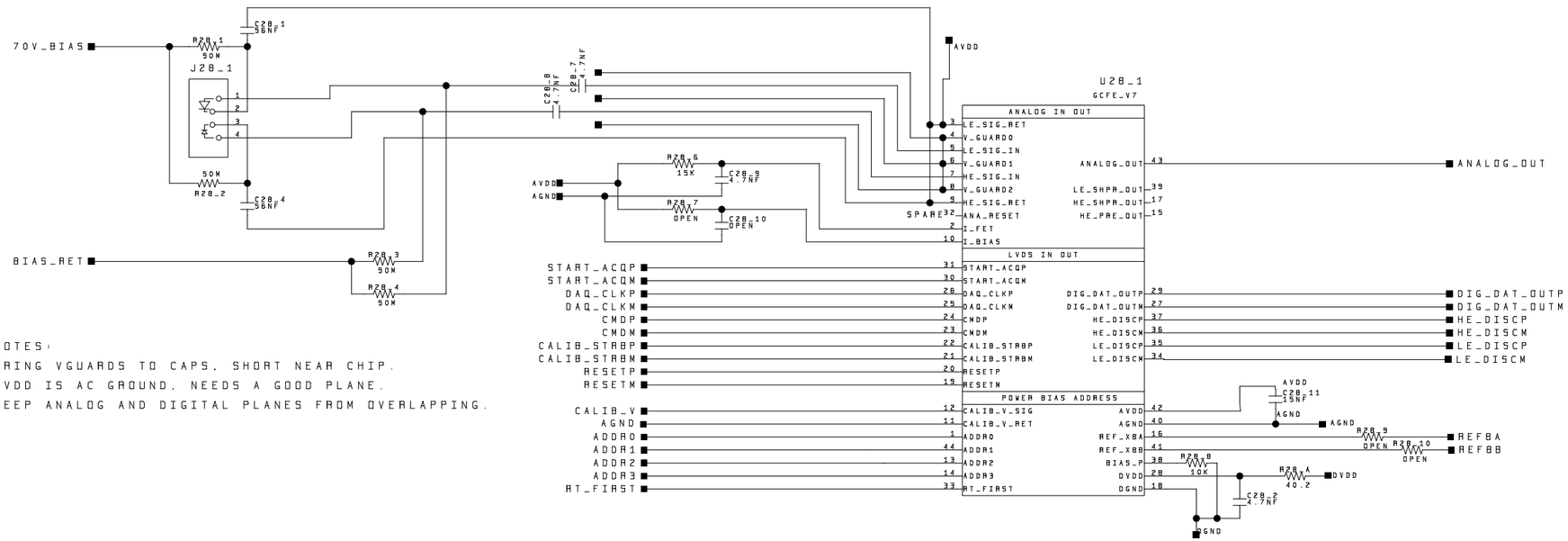

NOTES:

BRING VGUARDS TO CAPS. SHORT NEAR CHIP.

AVDD IS AC GROUND. NEEDS A GOOD PLANE.

KEEP ANALOG AND DIGITAL PLANES FROM OVERLAPPING.

STANFORD LINEAR ACCELERATOR CENTER
U.S. DEPARTMENT OF ENERGY
STANFORD UNIVERSITY STANFORD, CALIFORNIA

PROPRIETARY DATA OF STANFORD UNIVERSITY AND/OR U.S. DEPARTMENT OF ENERGY. RECIPIENT SHALL NOT PUBLISH THE INFORMATION WITHIN UNLESS GRANTED SPECIFIC PERMISSION OF STANFORD UNIVERSITY.

	DATE	APPROVALS
ENGR		
DFTR		
CHKR		

SLAC - GLAST
AFEE X/Y BOARD
ONE GCFE

LAT-DS-03343/4-00 D

REV	DESCRIPTION	DFTR	CHKR	ENGR APPV	DATE

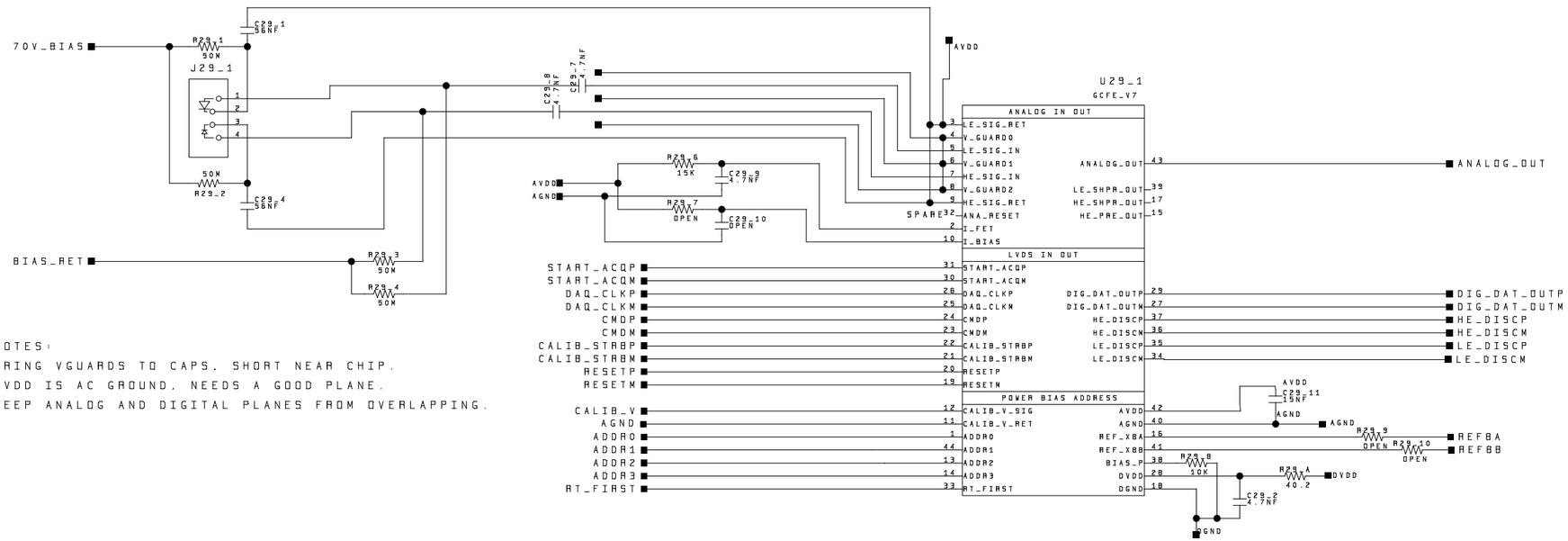

NOTES:

BRING VGUARDS TO CAPS. SHORT NEAR CHIP.

AVDD IS AC GROUND. NEEDS A GOOD PLANE.

KEEP ANALOG AND DIGITAL PLANES FROM OVERLAPPING.

STANFORD LINEAR ACCELERATOR CENTER
U.S. DEPARTMENT OF ENERGY
STANFORD UNIVERSITY STANFORD, CALIFORNIA

PROPRIETARY DATA OF STANFORD UNIVERSITY AND/OR U.S. DEPARTMENT OF ENERGY. RECIPIENT SHALL NOT PUBLISH THE INFORMATION WITHIN UNLESS GRANTED SPECIFIC PERMISSION OF STANFORD UNIVERSITY.

	DATE	APPROVALS
ENGR		
DFTR		
CHKR		

SLAC - GLAST
AFEE X/Y BOARD
ONE GCFE

LAT-DS-03343/4-00 D

REV	DESCRIPTION	DFTR	CHKR	ENGR APPV	DATE

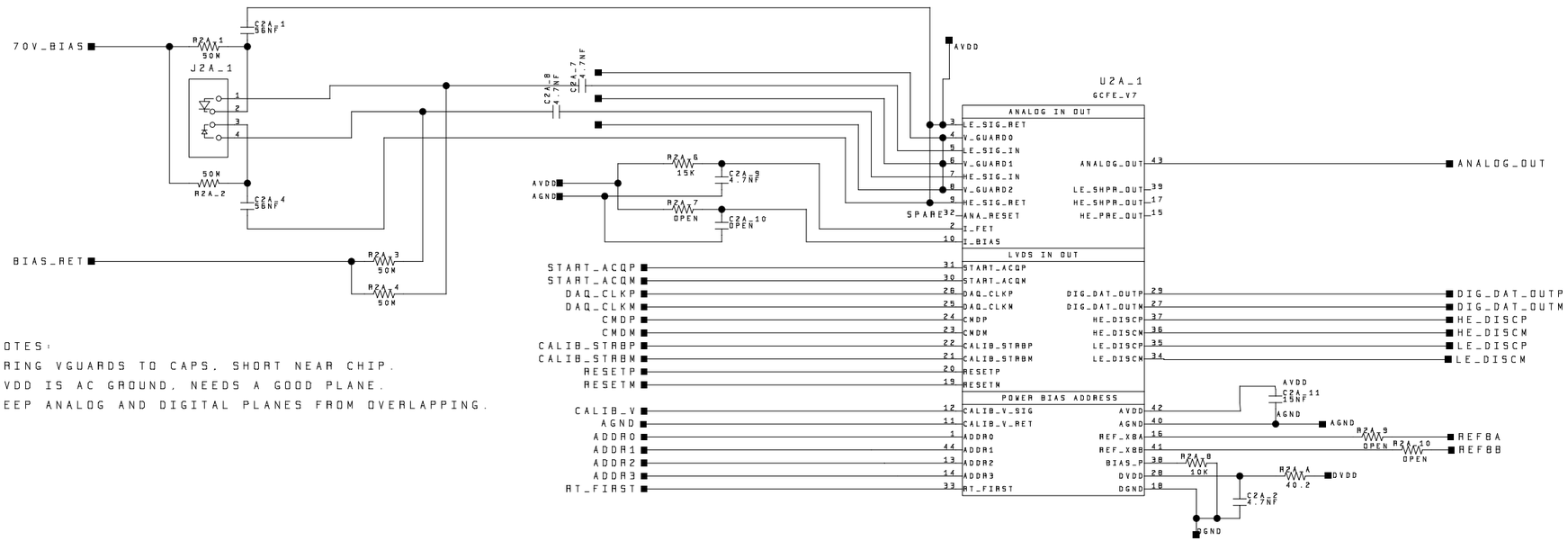

NOTES:

BRING VGUARDS TO CAPS, SHORT NEAR CHIP.

AVDD IS AC GROUND, NEEDS A GOOD PLANE.

KEEP ANALOG AND DIGITAL PLANES FROM OVERLAPPING.

STANFORD LINEAR ACCELERATOR CENTER
U.S. DEPARTMENT OF ENERGY
STANFORD UNIVERSITY STANFORD, CALIFORNIA

PROPRIETARY DATA OF STANFORD UNIVERSITY AND/OR U.S. DEPARTMENT OF ENERGY. RECIPIENT SHALL NOT PUBLISH THE INFORMATION WITHIN UNLESS GRANTED SPECIFIC PERMISSION OF STANFORD UNIVERSITY.

	DATE	APPROVALS
ENGR		
DFTR		
CHKR		

SLAC - GLAST
AFEE X/Y BOARD
ONE GCFE

LAT-DS-03343/4-00 D

REV	DESCRIPTION	DFTR	CHKR	ENGR APPV	DATE

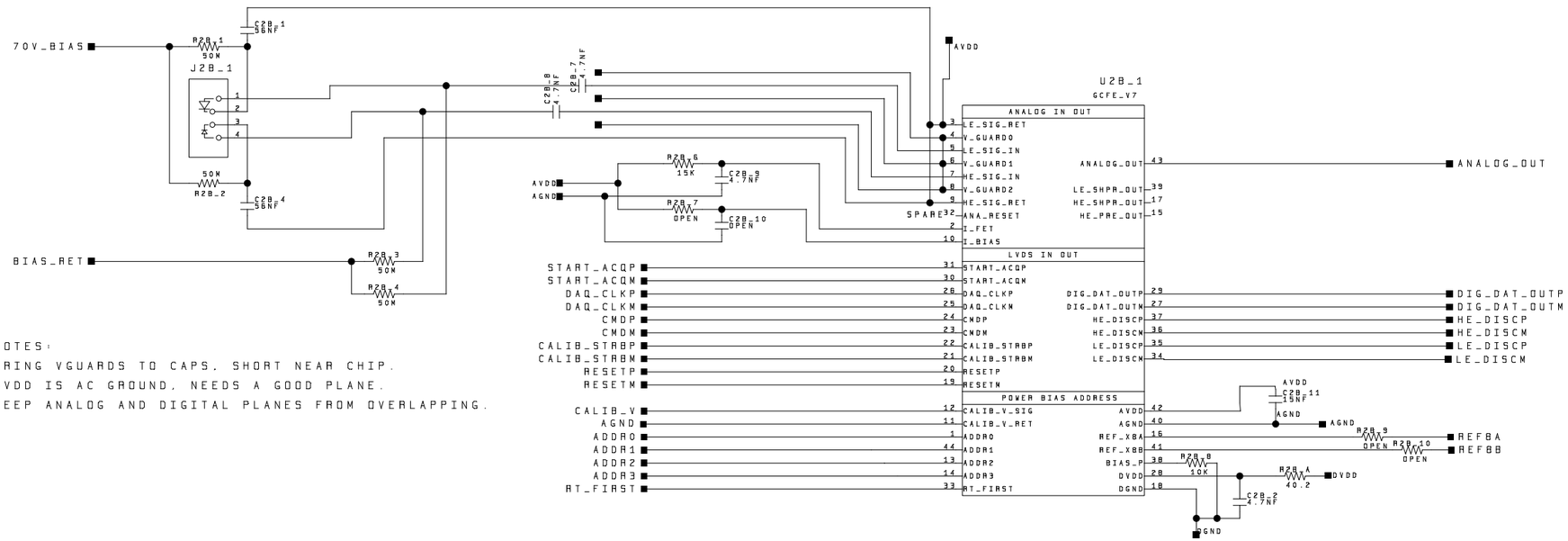

NOTES:

BRING VGUARDS TO CAPS, SHORT NEAR CHIP.

AVDD IS AC GROUND, NEEDS A GOOD PLANE.

KEEP ANALOG AND DIGITAL PLANES FROM OVERLAPPING.

STANFORD LINEAR ACCELERATOR CENTER
U.S. DEPARTMENT OF ENERGY
STANFORD UNIVERSITY STANFORD, CALIFORNIA

PROPRIETARY DATA OF STANFORD UNIVERSITY AND/OR U.S. DEPARTMENT OF ENERGY. RECIPIENT SHALL NOT PUBLISH THE INFORMATION WITHIN UNLESS GRANTED SPECIFIC PERMISSION OF STANFORD UNIVERSITY.

	DATE	APPROVALS
ENGR		
DFTR		
CHKR		

SHEET OF 57

SLAC - GLAST
AFEE X/Y BOARD
ONE GCFE

LAT-DS-03343/4-00 D

REV	DESCRIPTION	DFTR	CHKR	ENGR APPV	DATE

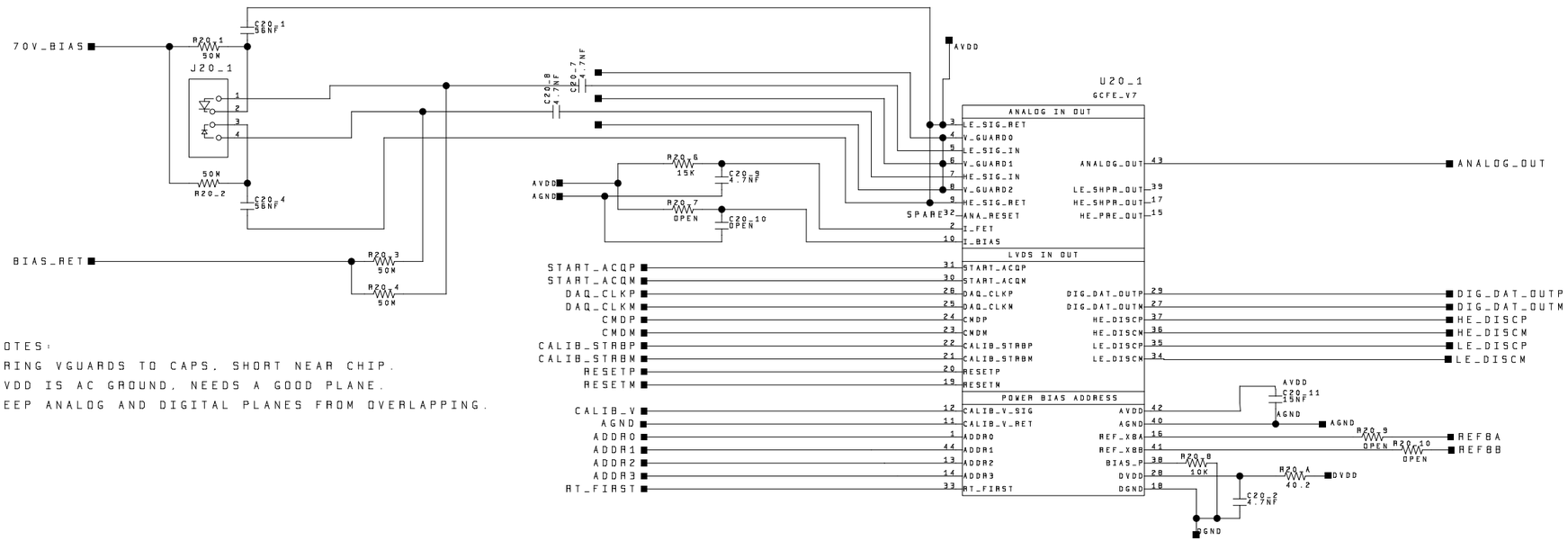

NOTES:

BRING VGUARDS TO CAPS. SHORT NEAR CHIP.

AVDD IS AC GROUND. NEEDS A GOOD PLANE.

KEEP ANALOG AND DIGITAL PLANES FROM OVERLAPPING.

STANFORD LINEAR ACCELERATOR CENTER
U.S. DEPARTMENT OF ENERGY
STANFORD UNIVERSITY STANFORD, CALIFORNIA

PROPRIETARY DATA OF STANFORD UNIVERSITY AND/OR U.S. DEPARTMENT OF ENERGY. RECIPIENT SHALL NOT PUBLISH THE INFORMATION WITHIN UNLESS GRANTED SPECIFIC PERMISSION OF STANFORD UNIVERSITY.

	DATE	APPROVALS
ENGR		
DFTR		
CHKR		

SLAC - GLAST
AFEE X/Y BOARD
ONE GCFE

LAT-DS-03343/4-00 D

REV	DESCRIPTION	DFTR	CHKR	ENGR APPV	DATE

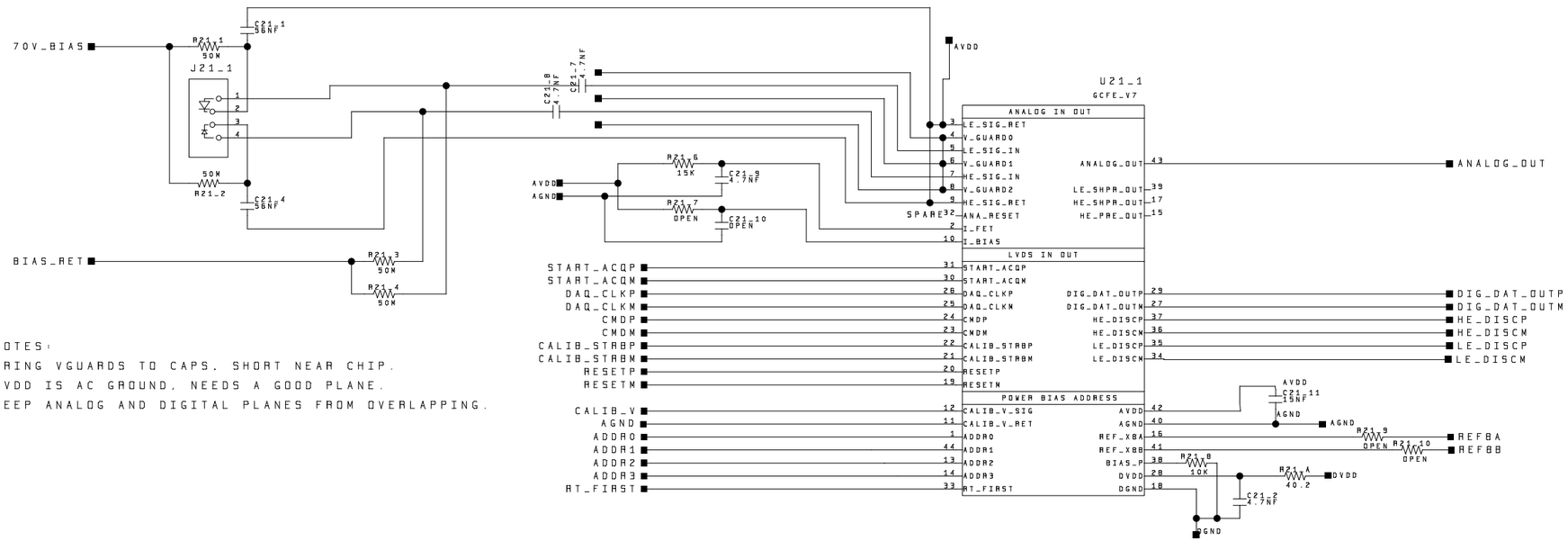

NOTES:

BRING VGUARDS TO CAPS, SHORT NEAR CHIP.

AVDD IS AC GROUND, NEEDS A GOOD PLANE.

KEEP ANALOG AND DIGITAL PLANES FROM OVERLAPPING.

STANFORD LINEAR ACCELERATOR CENTER
U.S. DEPARTMENT OF ENERGY
STANFORD UNIVERSITY STANFORD, CALIFORNIA

PROPRIETARY DATA OF STANFORD UNIVERSITY AND/OR U.S. DEPARTMENT OF ENERGY. RECIPIENT SHALL NOT PUBLISH THE INFORMATION WITHIN UNLESS GRANTED SPECIFIC PERMISSION OF STANFORD UNIVERSITY.

	DATE	APPROVALS
ENGR		
DFTR		
CHKR		

SLAC - GLAST
AFEE X/Y BOARD
ONE GCFE

LAT-DS-03343/4-00 D

REV	DESCRIPTION	DFTR	CHKR	ENGR APPV	DATE

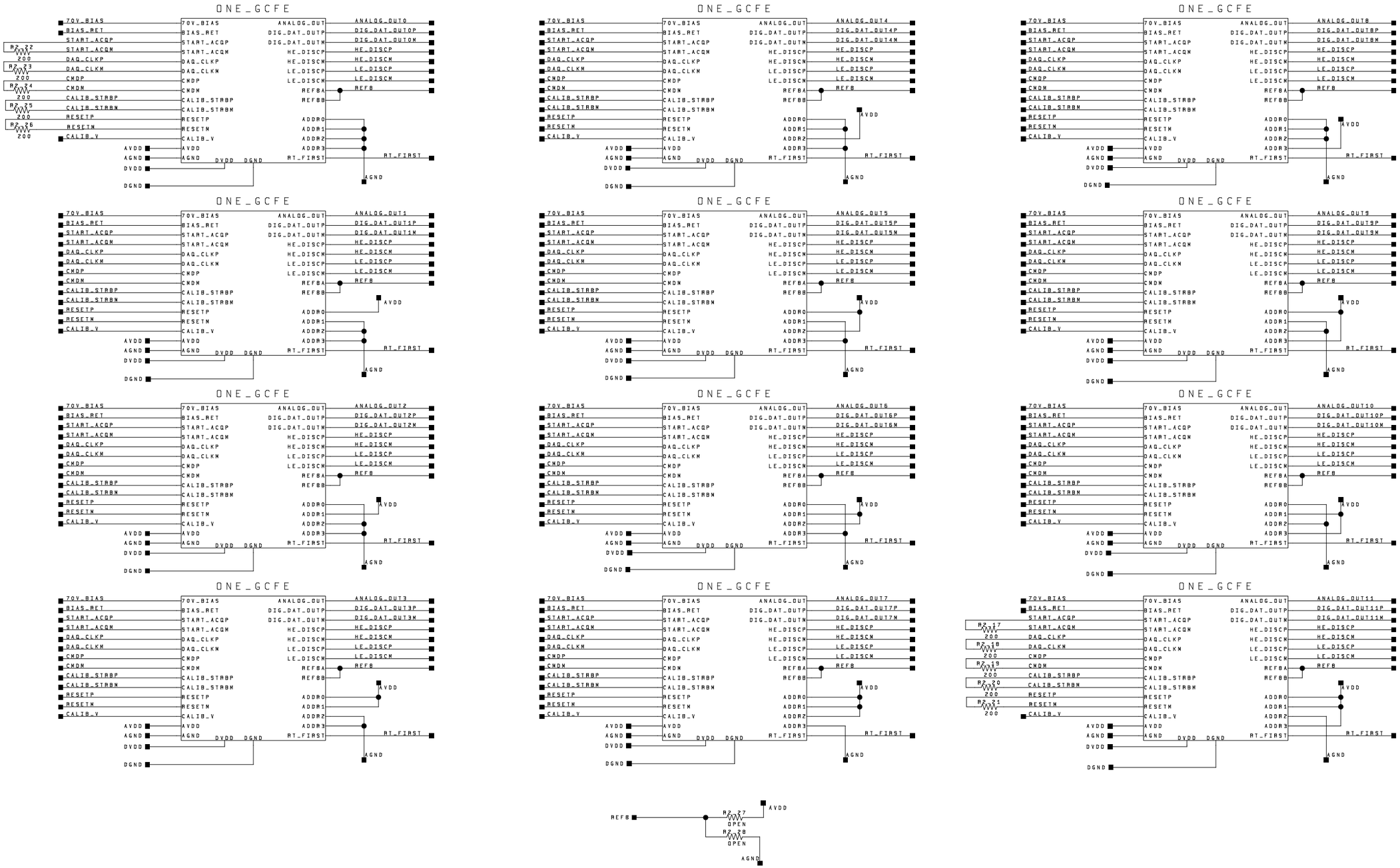

STANFORD LINEAR ACCELERATOR CENTER
U.S. DEPARTMENT OF ENERGY
STANFORD UNIVERSITY STANFORD, CALIFORNIA

PROPRIETARY DATA OF STANFORD UNIVERSITY AND/OR U.S. DEPARTMENT OF ENERGY. RECIPIENT SHALL NOT PUBLISH THE INFORMATION WITHIN UNLESS GRANTED SPECIFIC PERMISSION OF STANFORD UNIVERSITY.

	DATE	APPROVALS
ENGR		
DFTR		
CHKR		

SHEET OF 57

SLAC - GLAST
AFEE X/Y BOARD
TWELVE GCFE's

LAT-DS-03343/4-00 D

REV	DESCRIPTION	DFTR	CHKR	ENGR APPV	DATE

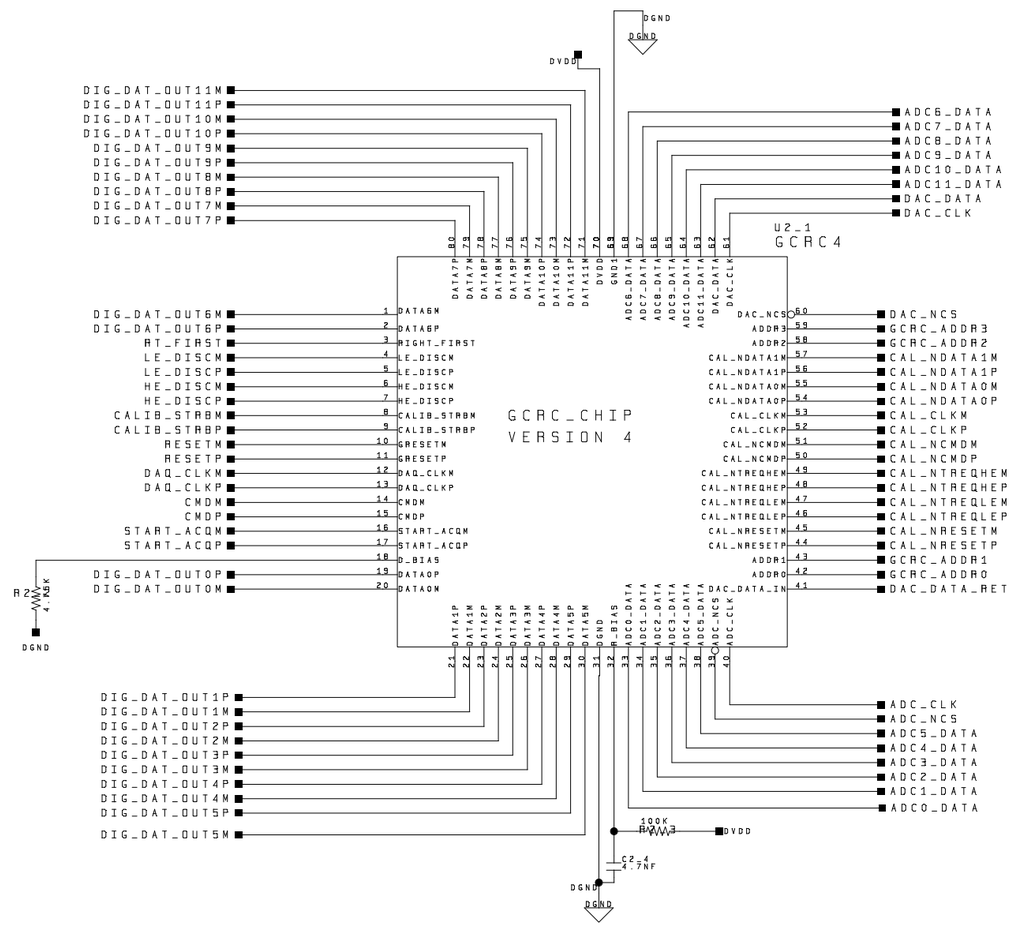

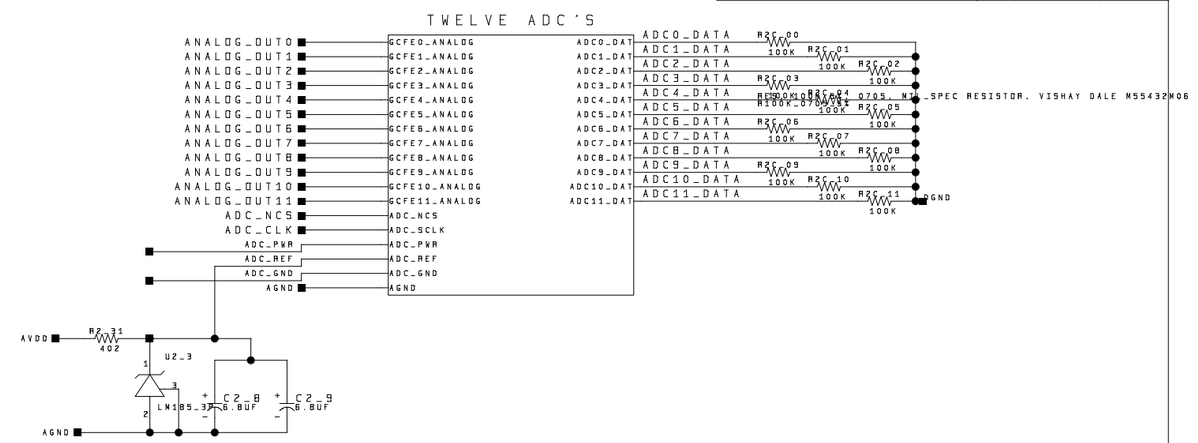

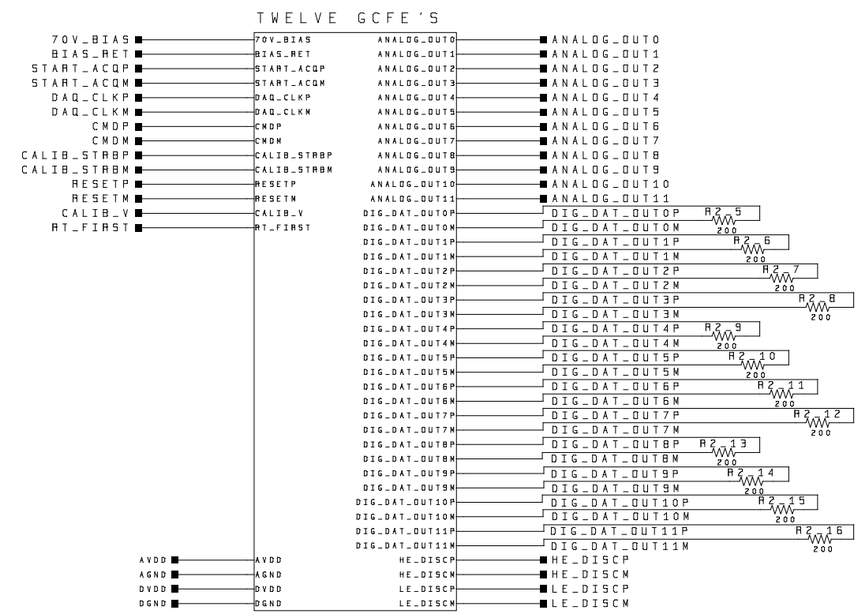

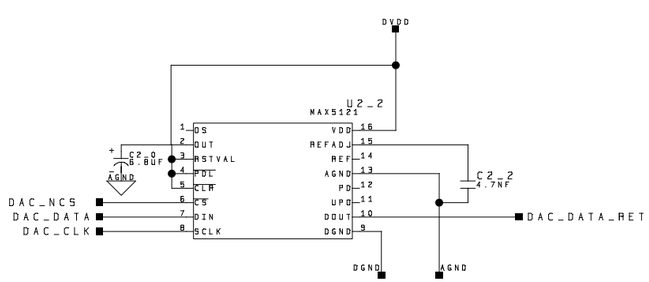

STANFORD LINEAR ACCELERATOR CENTER
U.S. DEPARTMENT OF ENERGY
STANFORD UNIVERSITY STANFORD, CALIFORNIA

PROPRIETARY DATA OF STANFORD UNIVERSITY AND/OR U.S. DEPARTMENT OF ENERGY. RECIPIENT SHALL NOT PUBLISH THE INFORMATION WITHIN UNLESS GRANTED SPECIFIC PERMISSION OF STANFORD UNIVERSITY.

	DATE	APPROVALS
ENGR		
DFTR		
CHKR		

SLAC - GLAST
AFEE X/Y BOARD
ONE ROW
AFEE X: LAT-DS-03342
AFEE Y: LAT-DS-03343

LAT-DS-03343/4-00 D

REV	DESCRIPTION	DFTR	CHKR	ENGR APPV	DATE

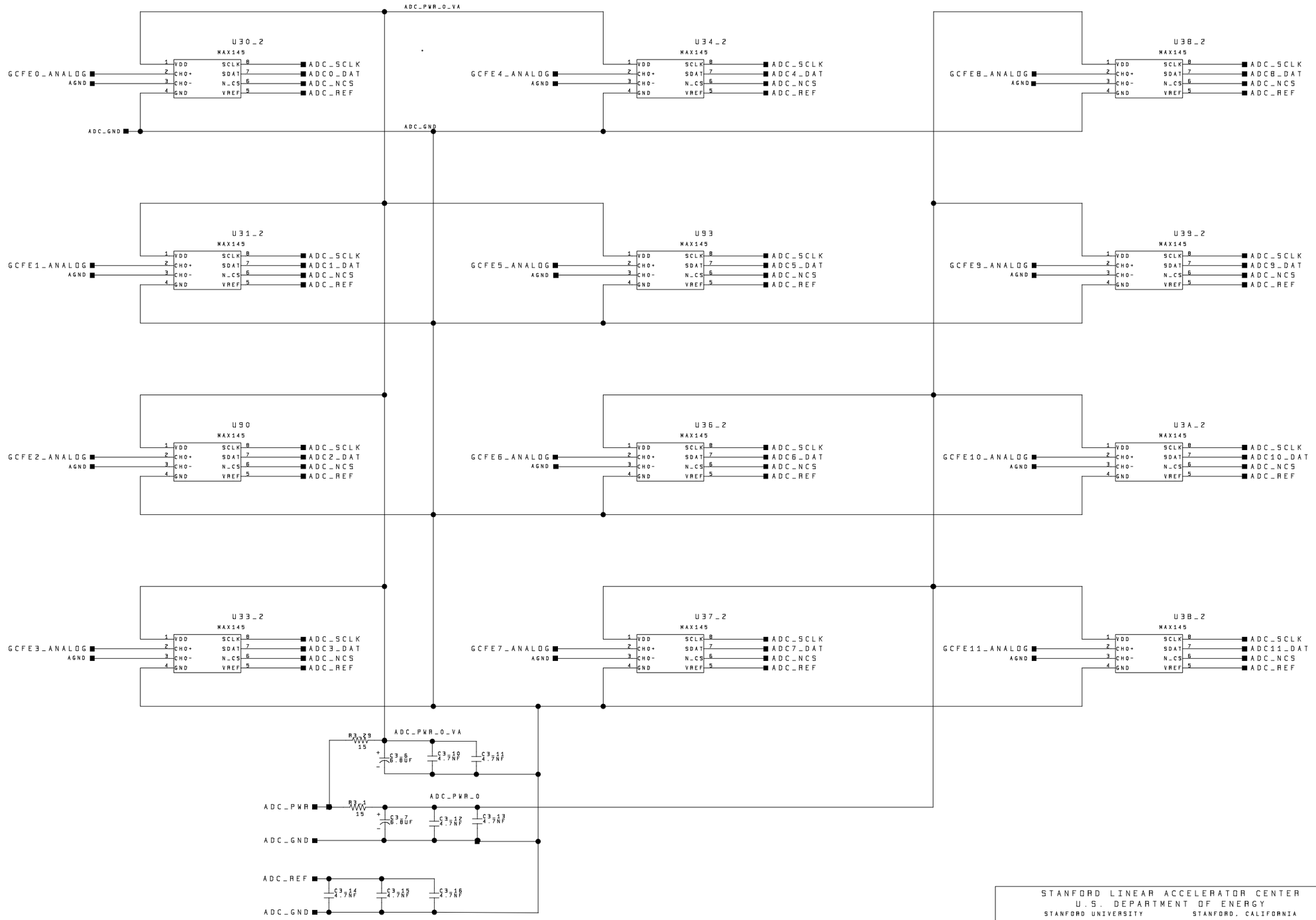

STANFORD LINEAR ACCELERATOR CENTER
U.S. DEPARTMENT OF ENERGY
STANFORD UNIVERSITY STANFORD, CALIFORNIA

PROPRIETARY DATA OF STANFORD UNIVERSITY AND/OR U.S. DEPARTMENT OF ENERGY. RECIPIENT SHALL NOT PUBLISH THE INFORMATION WITHIN UNLESS GRANTED SPECIFIC PERMISSION OF STANFORD UNIVERSITY.

	DATE	APPROVALS
ENGR		
DFTR		
CHKR		

SLAC - GLAST
AFEE X/Y BOARD
TWELVE ADC'S

LAT-DS-03343/4-00 D

REV	DESCRIPTION	DFTR	CHKR	ENGR APPV	DATE

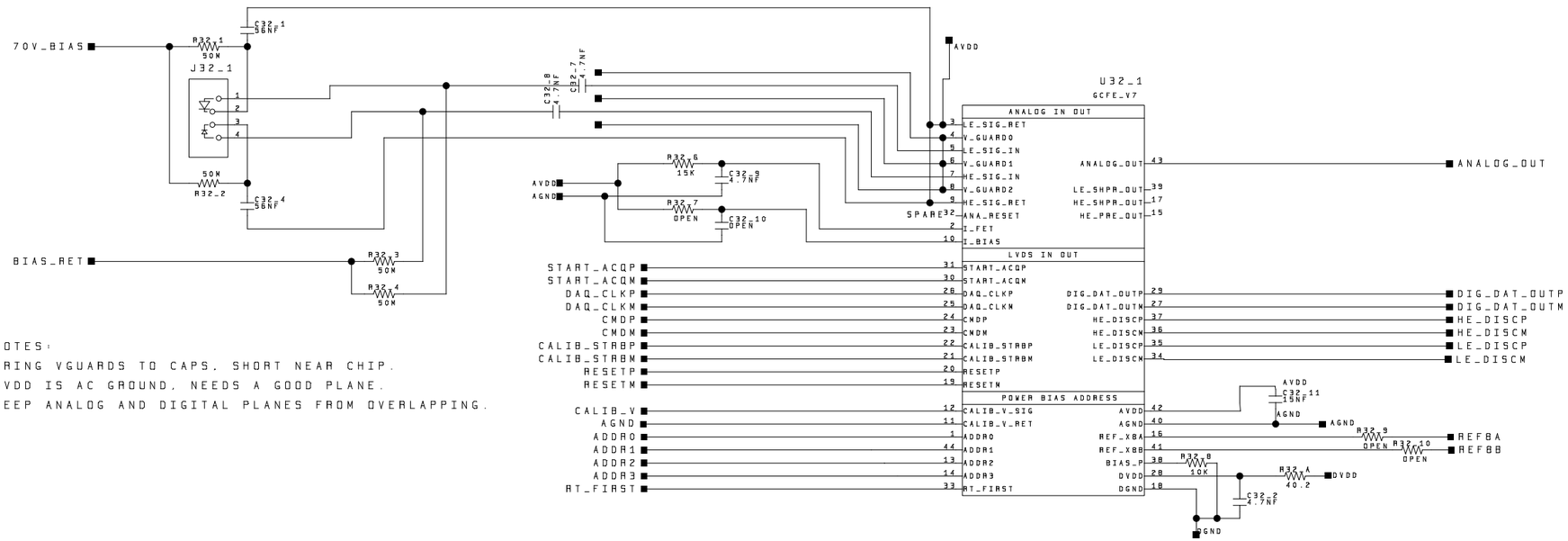

NOTES:

BRING VGUARDS TO CAPS. SHORT NEAR CHIP.

AVDD IS AC GROUND. NEEDS A GOOD PLANE.

KEEP ANALOG AND DIGITAL PLANES FROM OVERLAPPING.

STANFORD LINEAR ACCELERATOR CENTER
U.S. DEPARTMENT OF ENERGY
STANFORD UNIVERSITY STANFORD, CALIFORNIA

PROPRIETARY DATA OF STANFORD UNIVERSITY AND/OR U.S. DEPARTMENT OF ENERGY. RECIPIENT SHALL NOT PUBLISH THE INFORMATION WITHIN UNLESS GRANTED SPECIFIC PERMISSION OF STANFORD UNIVERSITY.

	DATE	APPROVALS
ENGR		
DFTR		
CHKR		

SHEET OF 57

SLAC - GLAST
AFEE X/Y BOARD
ONE GCFE

LAT-DS-03343/4-00 D

REV	DESCRIPTION	DFTR	CHKR	ENGR APPV	DATE

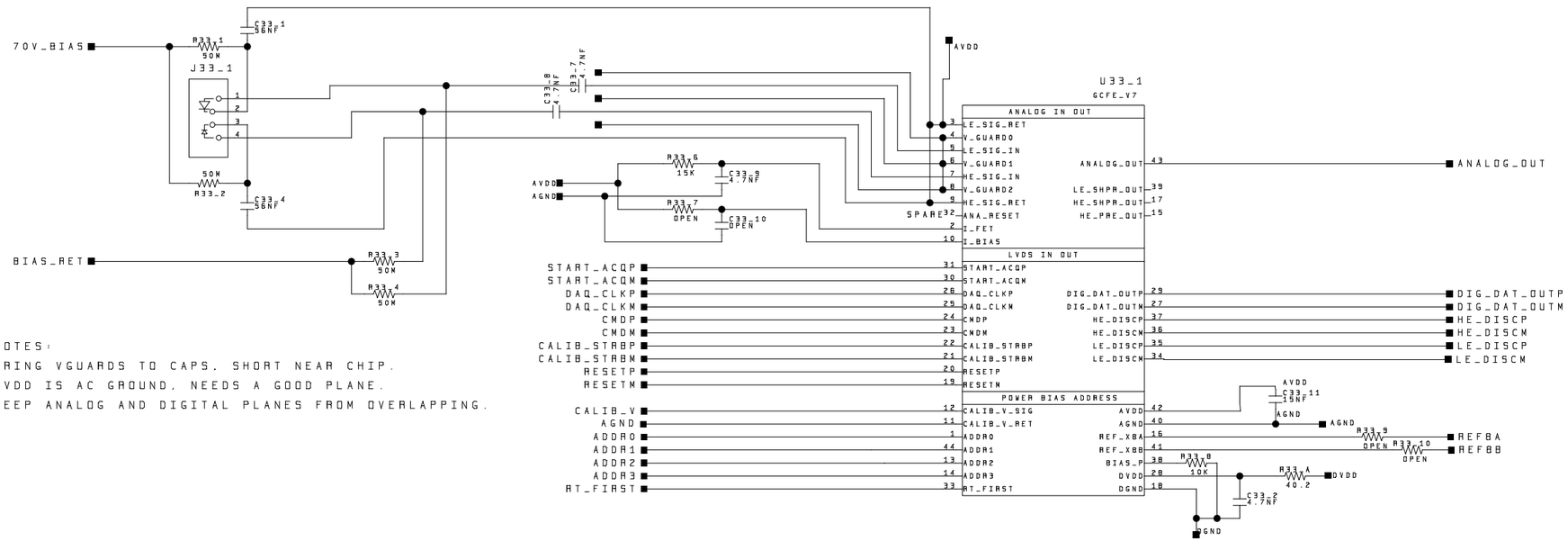

NOTES:

BRING VGUARDS TO CAPS, SHORT NEAR CHIP.

AVDD IS AC GROUND, NEEDS A GOOD PLANE.

KEEP ANALOG AND DIGITAL PLANES FROM OVERLAPPING.

STANFORD LINEAR ACCELERATOR CENTER
U.S. DEPARTMENT OF ENERGY
STANFORD UNIVERSITY STANFORD, CALIFORNIA

PROPRIETARY DATA OF STANFORD UNIVERSITY AND/OR U.S. DEPARTMENT OF ENERGY. RECIPIENT SHALL NOT PUBLISH THE INFORMATION WITHIN UNLESS GRANTED SPECIFIC PERMISSION OF STANFORD UNIVERSITY.

	DATE	APPROVALS
ENGR		
DFTR		
CHKR		

SHEET OF 57

SLAC - GLAST
AFEE X/Y BOARD
ONE GCFE

LAT-DS-03343/4-00 D

REV	DESCRIPTION	DFTR	CHKR	ENGR APPV	DATE

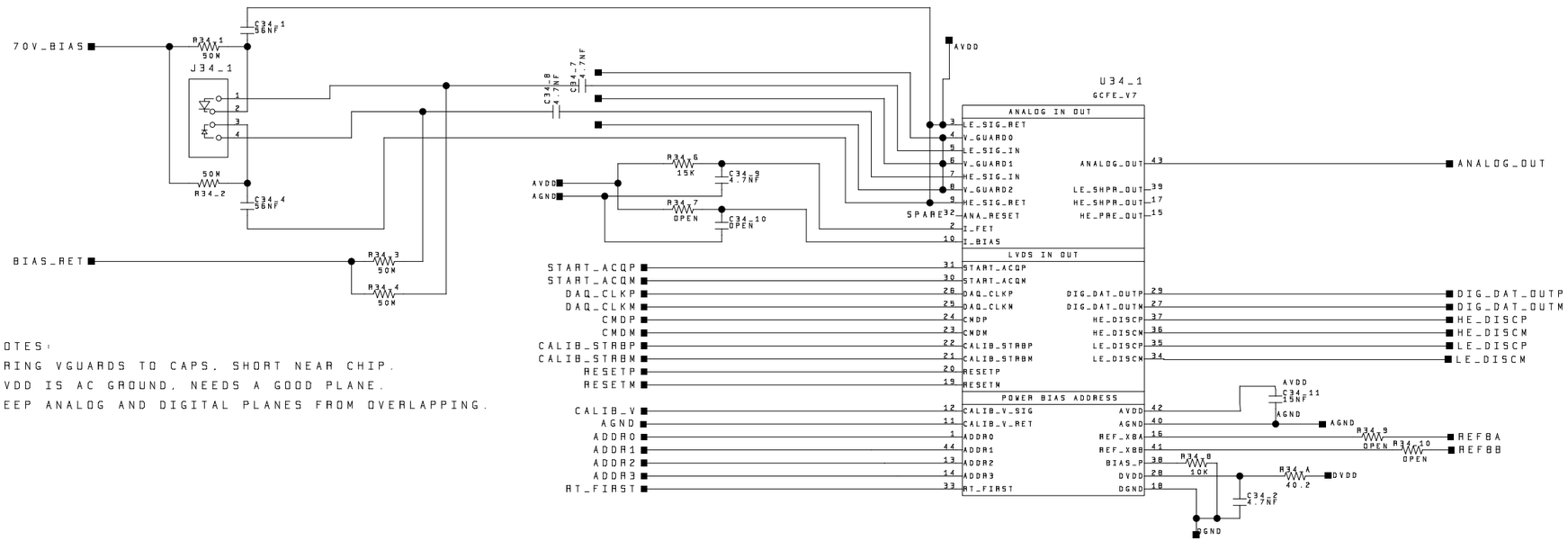

NOTES:

BRING VGUARDS TO CAPS. SHORT NEAR CHIP.

AVDD IS AC GROUND. NEEDS A GOOD PLANE.

KEEP ANALOG AND DIGITAL PLANES FROM OVERLAPPING.

STANFORD LINEAR ACCELERATOR CENTER
U.S. DEPARTMENT OF ENERGY
STANFORD UNIVERSITY STANFORD, CALIFORNIA

PROPRIETARY DATA OF STANFORD UNIVERSITY AND/OR U.S. DEPARTMENT OF ENERGY. RECIPIENT SHALL NOT PUBLISH THE INFORMATION WITHIN UNLESS GRANTED SPECIFIC PERMISSION OF STANFORD UNIVERSITY.

	DATE	APPROVALS
ENGR		
DFTR		
CHKR		

SLAC - GLAST
AFEE X/Y BOARD
ONE GCFE

LAT-DS-03343/4-00 D

REV	DESCRIPTION	DFTR	CHKR	ENGR APPV	DATE

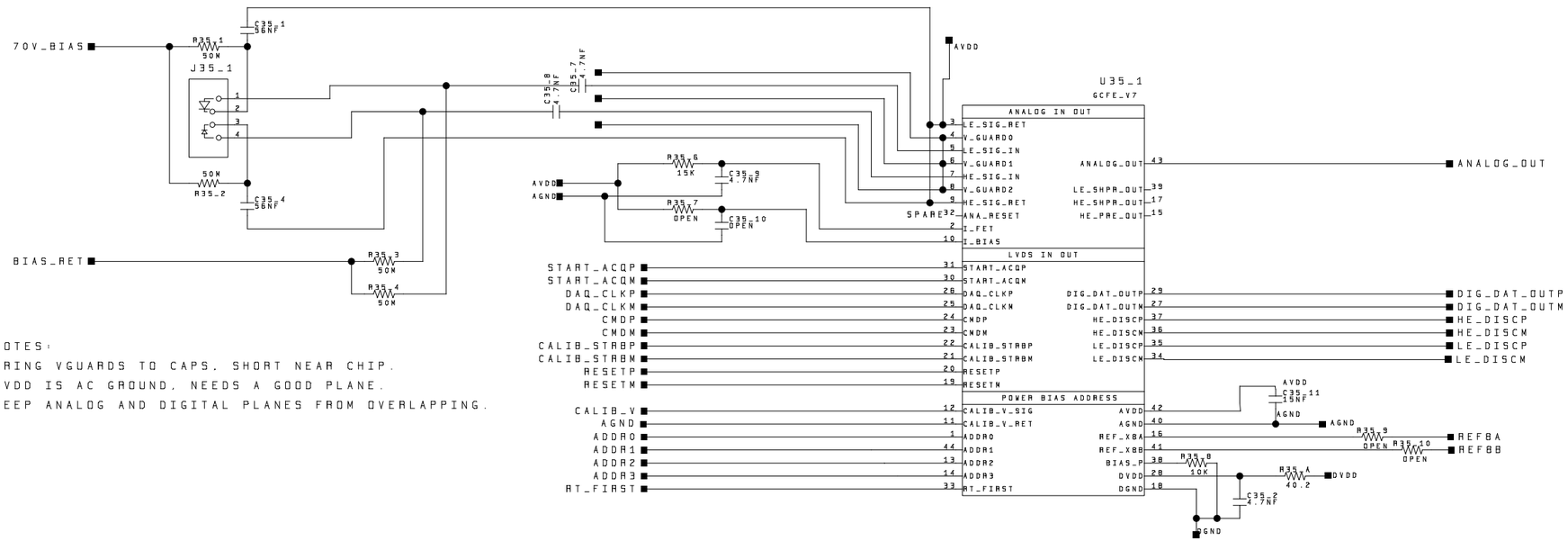

NOTES:

BRING VGUARDS TO CAPS, SHORT NEAR CHIP.

AVDD IS AC GROUND, NEEDS A GOOD PLANE.

KEEP ANALOG AND DIGITAL PLANES FROM OVERLAPPING.

STANFORD LINEAR ACCELERATOR CENTER
U.S. DEPARTMENT OF ENERGY
STANFORD UNIVERSITY STANFORD, CALIFORNIA

PROPRIETARY DATA OF STANFORD UNIVERSITY AND/OR U.S. DEPARTMENT OF ENERGY. RECIPIENT SHALL NOT PUBLISH THE INFORMATION WITHIN UNLESS GRANTED SPECIFIC PERMISSION OF STANFORD UNIVERSITY.

	DATE	APPROVALS
ENGR		
DFTR		
CHKR		

SLAC - GLAST
AFEE X/Y BOARD
ONE GCFE

LAT-DS-03343/4-00 D

REV	DESCRIPTION	DFTR	CHKR	ENGR APPV	DATE

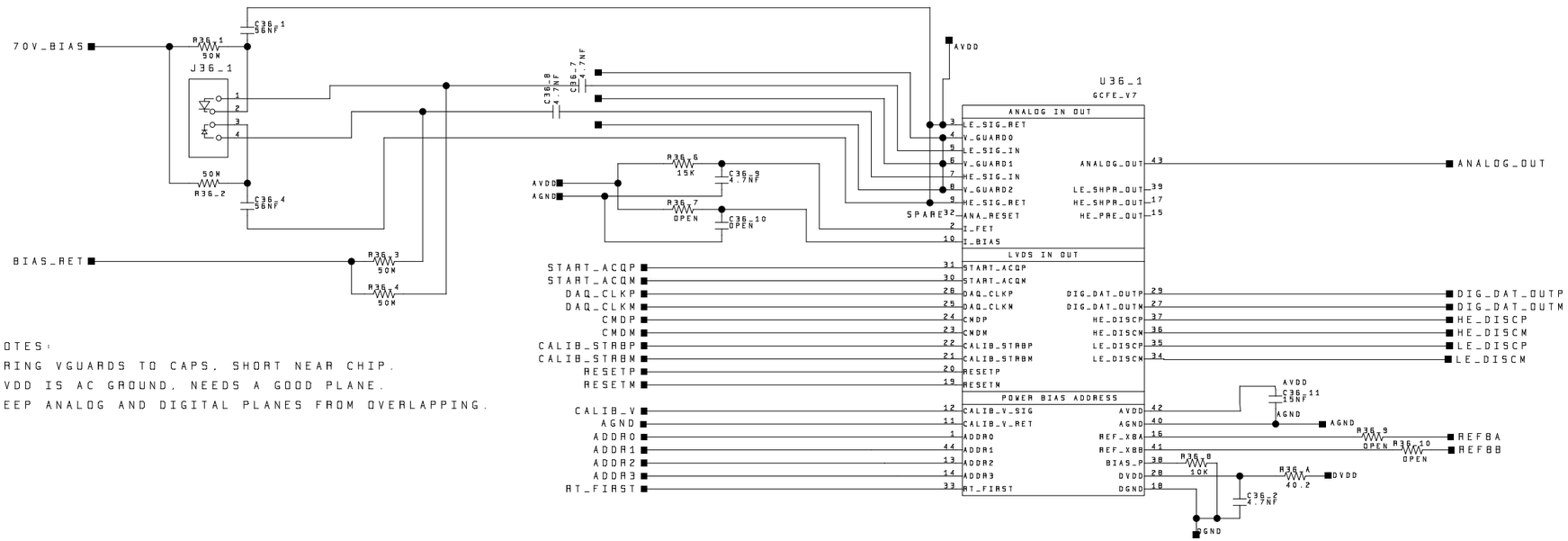

NOTES:

BRING VGUARDS TO CAPS. SHORT NEAR CHIP.

AVDD IS AC GROUND. NEEDS A GOOD PLANE.

KEEP ANALOG AND DIGITAL PLANES FROM OVERLAPPING.

STANFORD LINEAR ACCELERATOR CENTER
U.S. DEPARTMENT OF ENERGY
STANFORD UNIVERSITY STANFORD, CALIFORNIA

PROPRIETARY DATA OF STANFORD UNIVERSITY AND/OR U.S. DEPARTMENT OF ENERGY. RECIPIENT SHALL NOT PUBLISH THE INFORMATION WITHIN UNLESS GRANTED SPECIFIC PERMISSION OF STANFORD UNIVERSITY.

	DATE	APPROVALS
ENGR		
DFTR		
CHKR		

SLAC - GLAST
AFEE X/Y BOARD
ONE GCFE

LAT-DS-03343/4-00 D

REV	DESCRIPTION	DFTR	CHKR	ENGR APPV	DATE

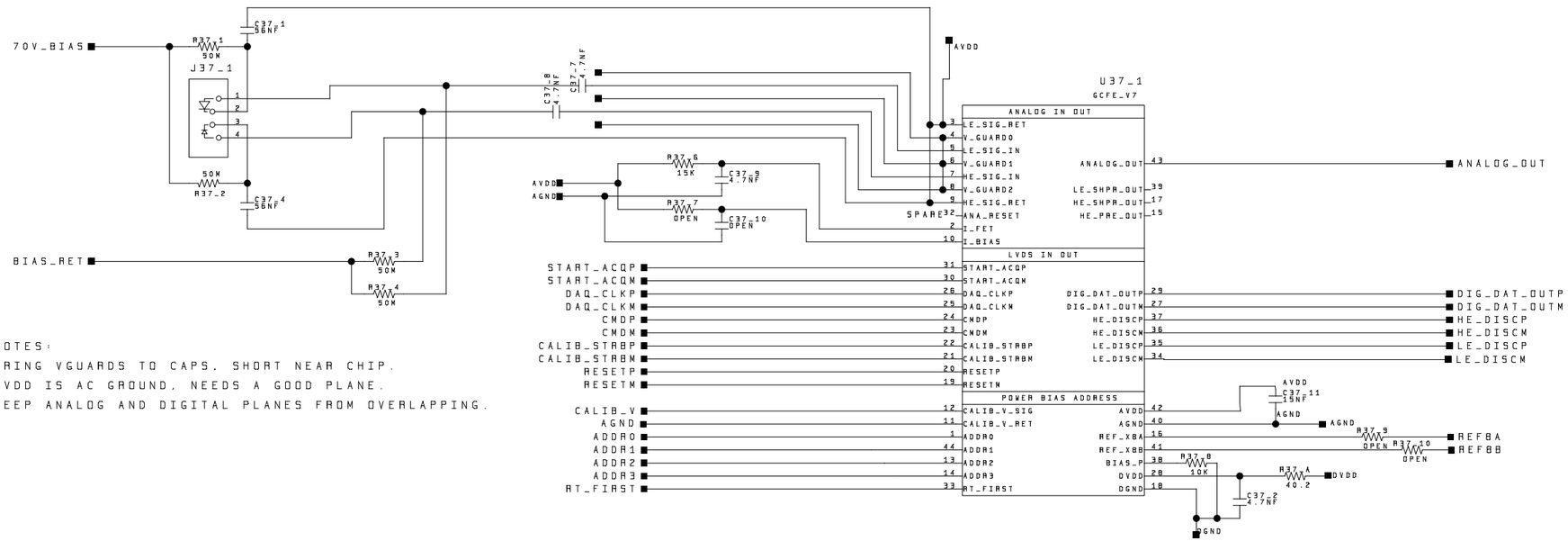

NOTES:

BRING VGUARDS TO CAPS. SHORT NEAR CHIP.

AVDD IS AC GROUND. NEEDS A GOOD PLANE.

KEEP ANALOG AND DIGITAL PLANES FROM OVERLAPPING.

STANFORD LINEAR ACCELERATOR CENTER
U.S. DEPARTMENT OF ENERGY
STANFORD UNIVERSITY STANFORD, CALIFORNIA

PROPRIETARY DATA OF STANFORD UNIVERSITY AND/OR U.S. DEPARTMENT OF ENERGY. RECIPIENT SHALL NOT PUBLISH THE INFORMATION WITHIN UNLESS GRANTED SPECIFIC PERMISSION OF STANFORD UNIVERSITY.

	DATE	APPROVALS
ENGR		
DFTR		
CHKR		

SLAC - GLAST
AFEE X/Y BOARD
ONE GCFE

LAT-DS-03343/4-00 D

REV	DESCRIPTION	DFTR	CHKR	ENGR APPV	DATE

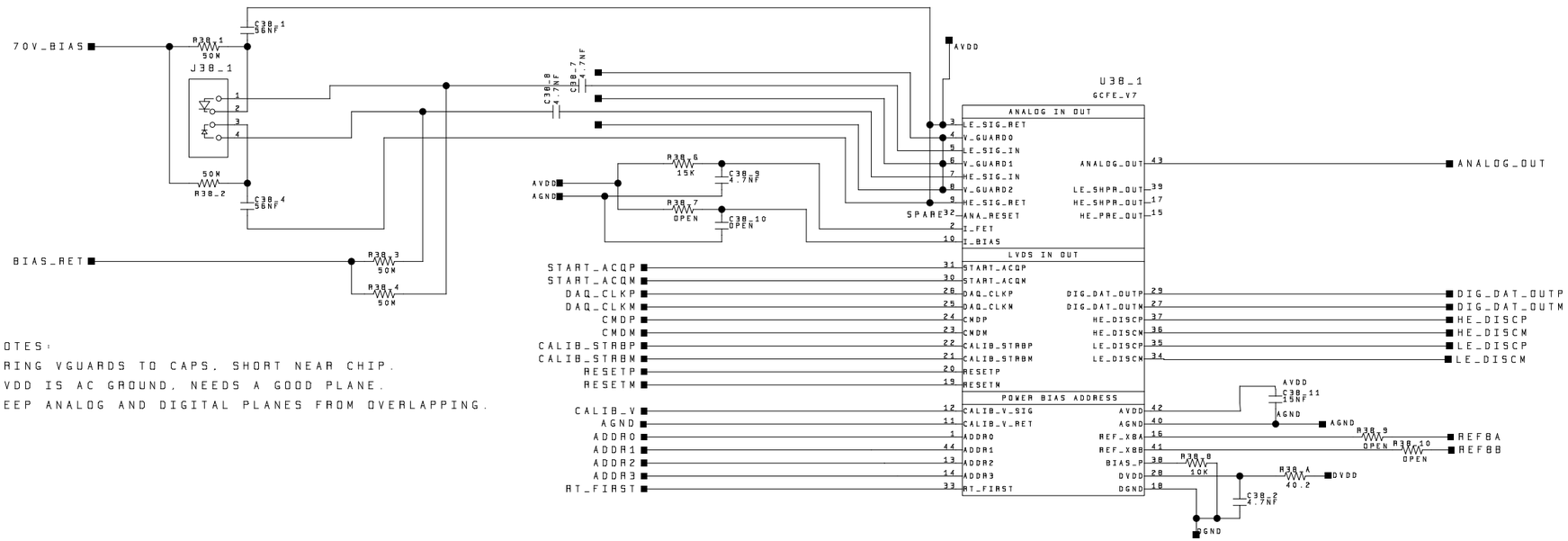

NOTES:

BRING VGUARDS TO CAPS. SHORT NEAR CHIP.

AVDD IS AC GROUND. NEEDS A GOOD PLANE.

KEEP ANALOG AND DIGITAL PLANES FROM OVERLAPPING.

STANFORD LINEAR ACCELERATOR CENTER
U.S. DEPARTMENT OF ENERGY
STANFORD UNIVERSITY STANFORD, CALIFORNIA

PROPRIETARY DATA OF STANFORD UNIVERSITY AND/OR U.S. DEPARTMENT OF ENERGY. RECIPIENT SHALL NOT PUBLISH THE INFORMATION WITHIN UNLESS GRANTED SPECIFIC PERMISSION OF STANFORD UNIVERSITY.

	DATE	APPROVALS
ENGR		
DFTR		
CHKR		

SLAC - GLAST
AFEE X/Y BOARD
ONE GCFE

LAT-DS-03343/4-00 D

REV	DESCRIPTION	DFTR	CHKR	ENGR APPV	DATE

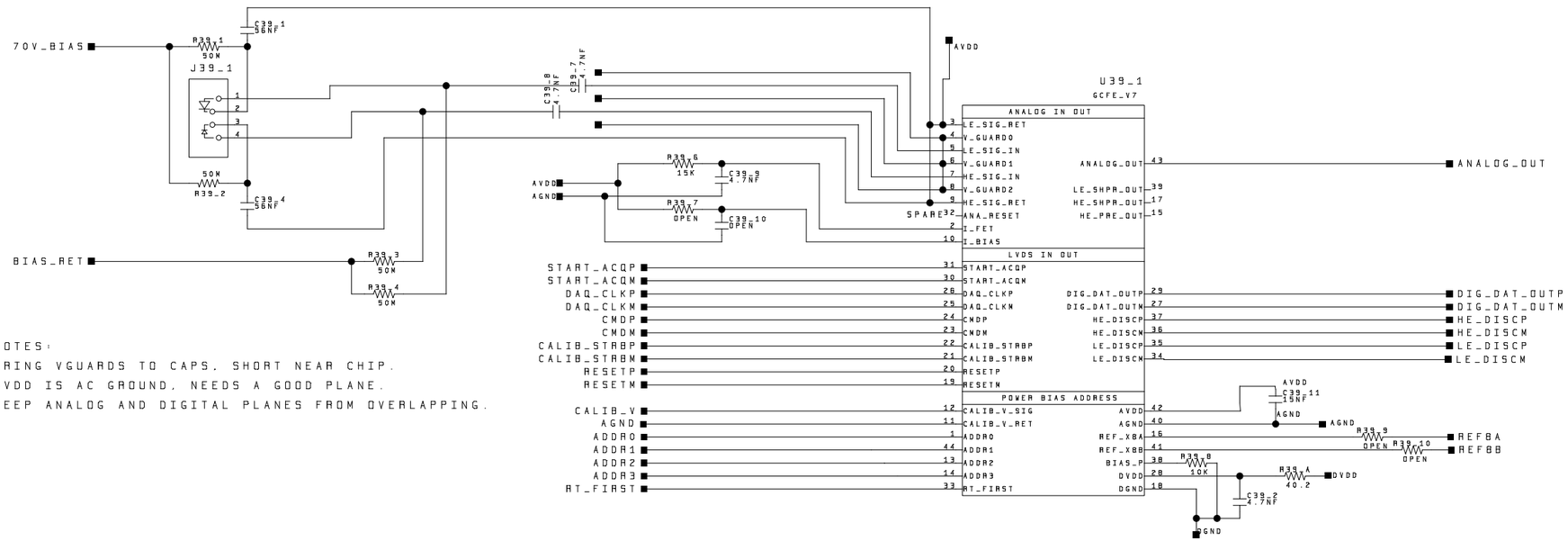

NOTES:

BRING VGUARDS TO CAPS. SHORT NEAR CHIP.

AVDD IS AC GROUND. NEEDS A GOOD PLANE.

KEEP ANALOG AND DIGITAL PLANES FROM OVERLAPPING.

STANFORD LINEAR ACCELERATOR CENTER
U.S. DEPARTMENT OF ENERGY
STANFORD UNIVERSITY STANFORD, CALIFORNIA

PROPRIETARY DATA OF STANFORD UNIVERSITY AND/OR U.S. DEPARTMENT OF ENERGY. RECIPIENT SHALL NOT PUBLISH THE INFORMATION WITHIN UNLESS GRANTED SPECIFIC PERMISSION OF STANFORD UNIVERSITY.

	DATE	APPROVALS
ENGR		
DFTR		
CHKR		

SHEET OF 57

SLAC - GLAST
AFEE X/Y BOARD
ONE GCFE

LAT-DS-03343/4-00 D

REV	DESCRIPTION	DFTR	CHKR	ENGR APPV	DATE

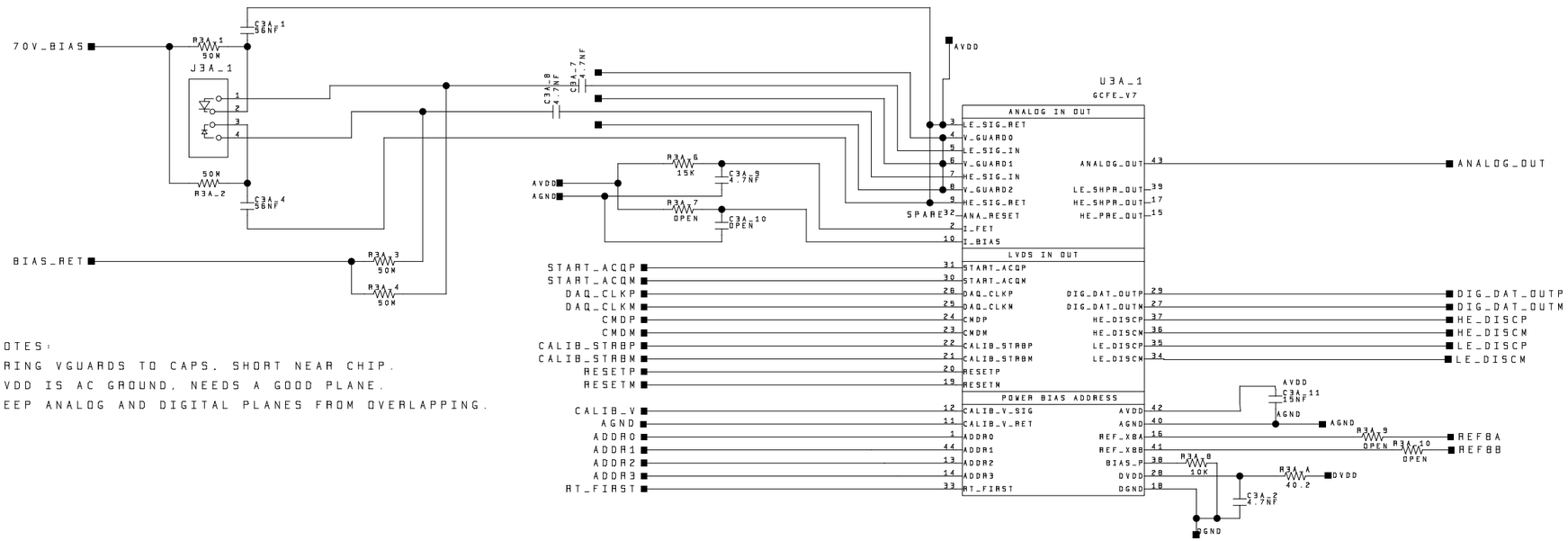

NOTES:

BRING VGUARDS TO CAPS, SHORT NEAR CHIP.

AVDD IS AC GROUND, NEEDS A GOOD PLANE.

KEEP ANALOG AND DIGITAL PLANES FROM OVERLAPPING.

STANFORD LINEAR ACCELERATOR CENTER
U.S. DEPARTMENT OF ENERGY
STANFORD UNIVERSITY STANFORD, CALIFORNIA

PROPRIETARY DATA OF STANFORD UNIVERSITY AND/OR U.S. DEPARTMENT OF ENERGY. RECIPIENT SHALL NOT PUBLISH THE INFORMATION WITHIN UNLESS GRANTED SPECIFIC PERMISSION OF STANFORD UNIVERSITY.

	DATE	APPROVALS
ENGR		
DFTR		
CHKR		

SLAC - GLAST
AFEE X/Y BOARD
ONE GCFE

LAT-DS-03343/4-00 D

REV	DESCRIPTION	DFTR	CHKR	ENGR APPV	DATE

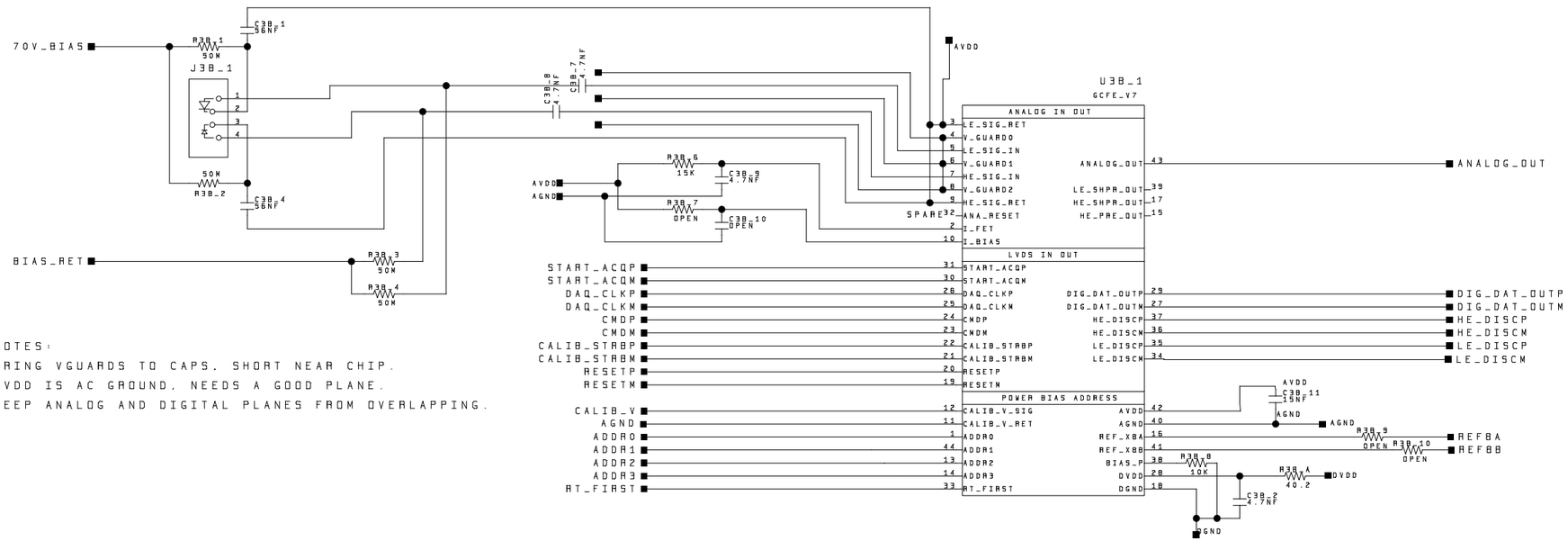

NOTES:

BRING VGUARDS TO CAPS, SHORT NEAR CHIP.

AVDD IS AC GROUND, NEEDS A GOOD PLANE.

KEEP ANALOG AND DIGITAL PLANES FROM OVERLAPPING.

STANFORD LINEAR ACCELERATOR CENTER
U.S. DEPARTMENT OF ENERGY
STANFORD UNIVERSITY STANFORD, CALIFORNIA

PROPRIETARY DATA OF STANFORD UNIVERSITY AND/OR U.S. DEPARTMENT OF ENERGY. RECIPIENT SHALL NOT PUBLISH THE INFORMATION WITHIN UNLESS GRANTED SPECIFIC PERMISSION OF STANFORD UNIVERSITY.

	DATE	APPROVALS
ENGR		
DFTR		
CHKR		

SLAC - GLAST
AFEE X/Y BOARD
ONE GCFE

LAT-DS-03343/4-00 D

REV	DESCRIPTION	DFTR	CHKR	ENGR APPV	DATE

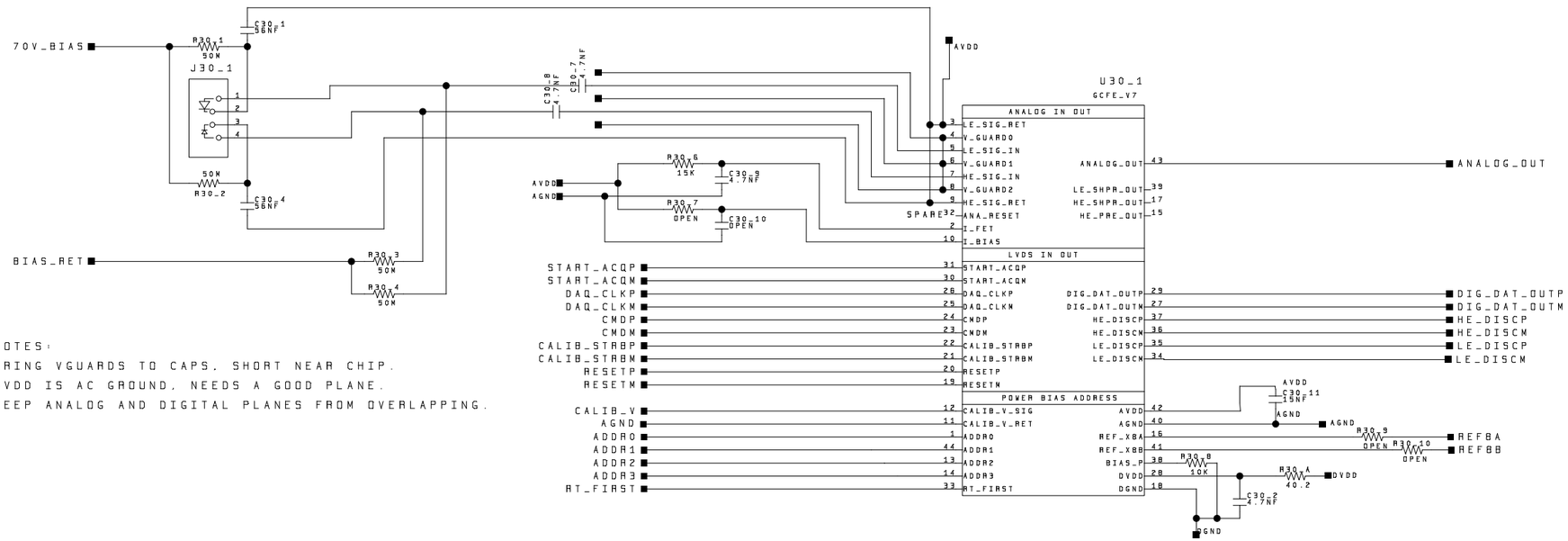

NOTES:

BRING VGUARDS TO CAPS. SHORT NEAR CHIP.

AVDD IS AC GROUND. NEEDS A GOOD PLANE.

KEEP ANALOG AND DIGITAL PLANES FROM OVERLAPPING.

STANFORD LINEAR ACCELERATOR CENTER
U.S. DEPARTMENT OF ENERGY
STANFORD UNIVERSITY STANFORD, CALIFORNIA

PROPRIETARY DATA OF STANFORD UNIVERSITY AND/OR U.S. DEPARTMENT OF ENERGY. RECIPIENT SHALL NOT PUBLISH THE INFORMATION WITHIN UNLESS GRANTED SPECIFIC PERMISSION OF STANFORD UNIVERSITY.

	DATE	APPROVALS
ENGR		
DFTR		
CHKR		

SLAC - GLAST
AFEE X/Y BOARD
ONE GCFE

LAT-DS-03343/4-00 D

REV	DESCRIPTION	DFTR	CHKR	ENGR APPV	DATE

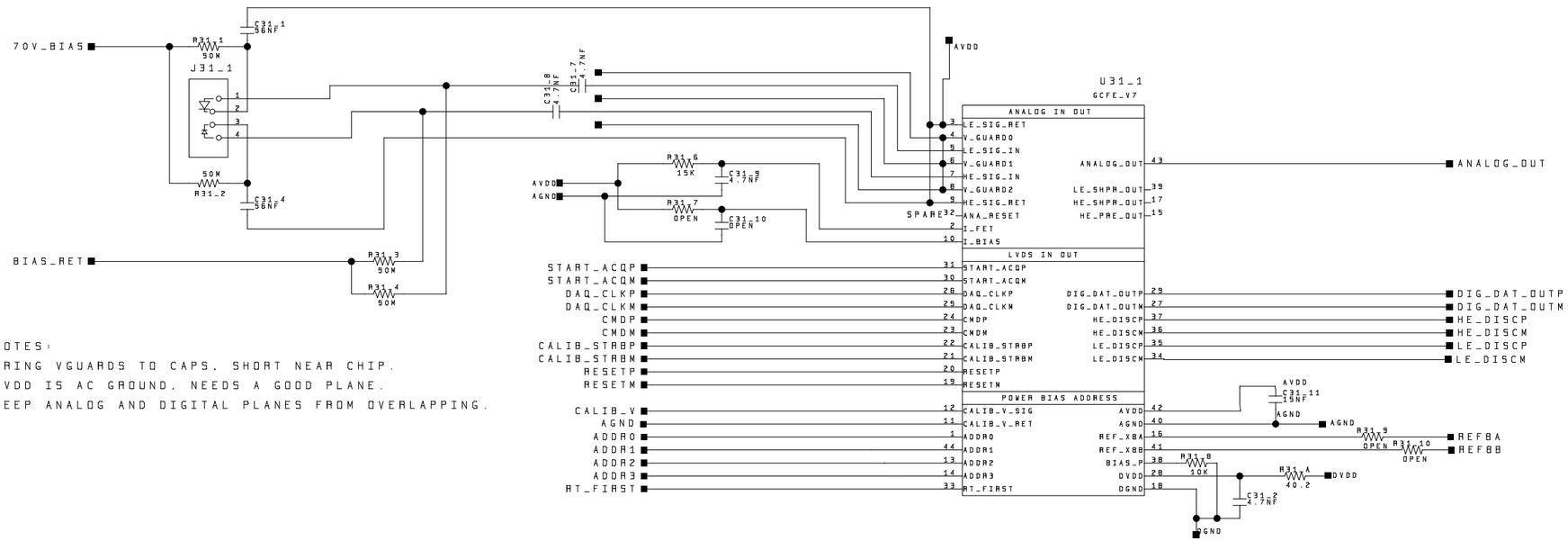

NOTES:

BRING VGUARDS TO CAPS, SHORT NEAR CHIP.

AVDD IS AC GROUND, NEEDS A GOOD PLANE.

KEEP ANALOG AND DIGITAL PLANES FROM OVERLAPPING.

STANFORD LINEAR ACCELERATOR CENTER
U.S. DEPARTMENT OF ENERGY
STANFORD UNIVERSITY STANFORD, CALIFORNIA

PROPRIETARY DATA OF STANFORD UNIVERSITY AND/OR U.S. DEPARTMENT OF ENERGY. RECIPIENT SHALL NOT PUBLISH THE INFORMATION WITHIN UNLESS GRANTED SPECIFIC PERMISSION OF STANFORD UNIVERSITY.

	DATE	APPROVALS
ENGR		
DFTR		
CHKR		

SLAC - GLAST
AFEE X/Y BOARD
ONE GCFE

LAT-DS-03343/4-00 D

REV	DESCRIPTION	DFTR	CHKR	ENGR APPV	DATE

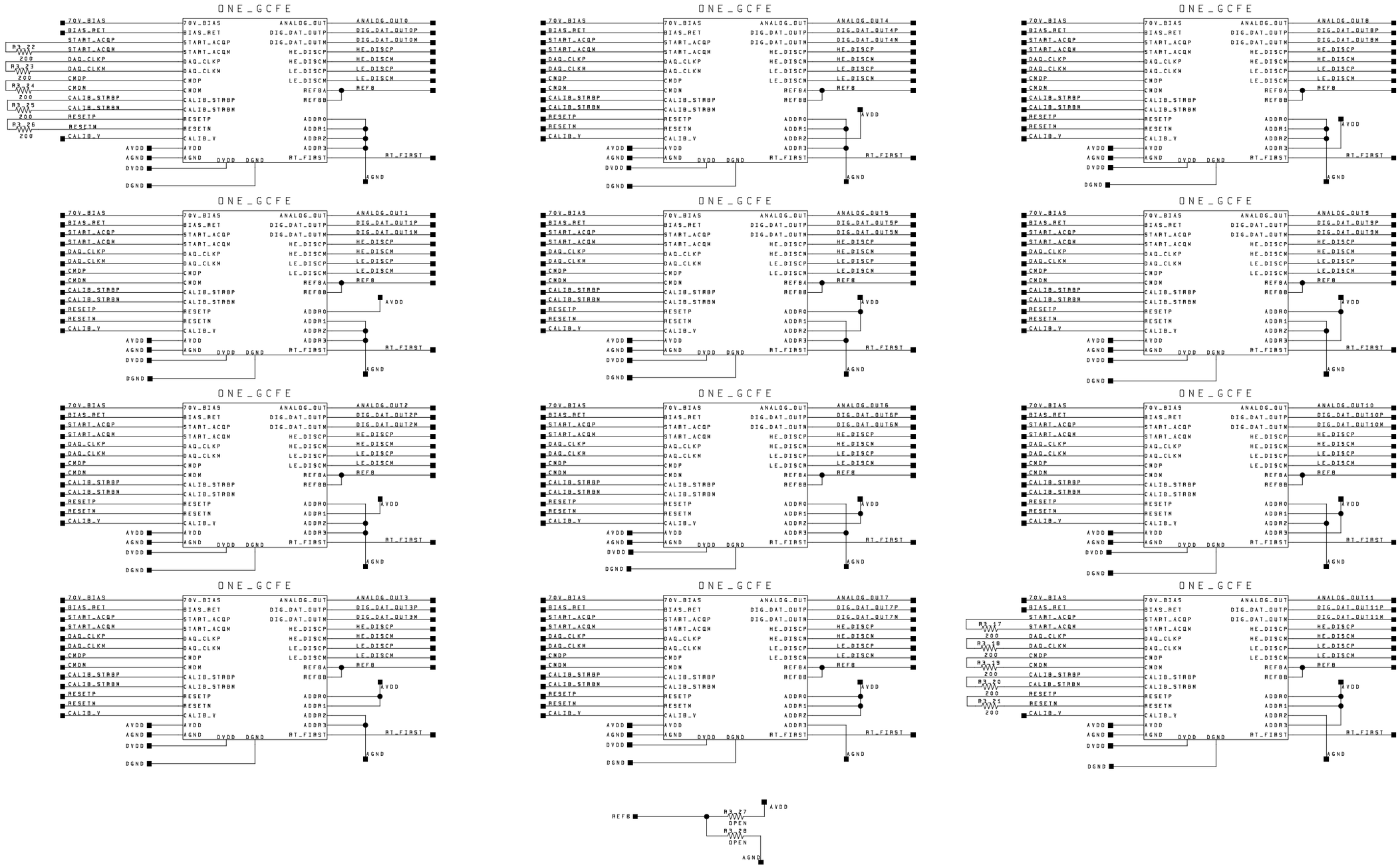

STANFORD LINEAR ACCELERATOR CENTER
U.S. DEPARTMENT OF ENERGY
STANFORD UNIVERSITY STANFORD, CALIFORNIA

PROPRIETARY DATA OF STANFORD UNIVERSITY AND/OR U.S. DEPARTMENT OF ENERGY. RECIPIENT SHALL NOT PUBLISH THE INFORMATION WITHIN UNLESS GRANTED SPECIFIC PERMISSION OF STANFORD UNIVERSITY.

	DATE	APPROVALS
ENGR		
DFTR		
CHKR		

SHEET OF 57

SLAC - GLAST
AFEE X/Y BOARD
TWELVE GCFE's

LAT-DS-03343/4-00 D

REV	DESCRIPTION	DFTR	CHKR	ENGR APPV	DATE

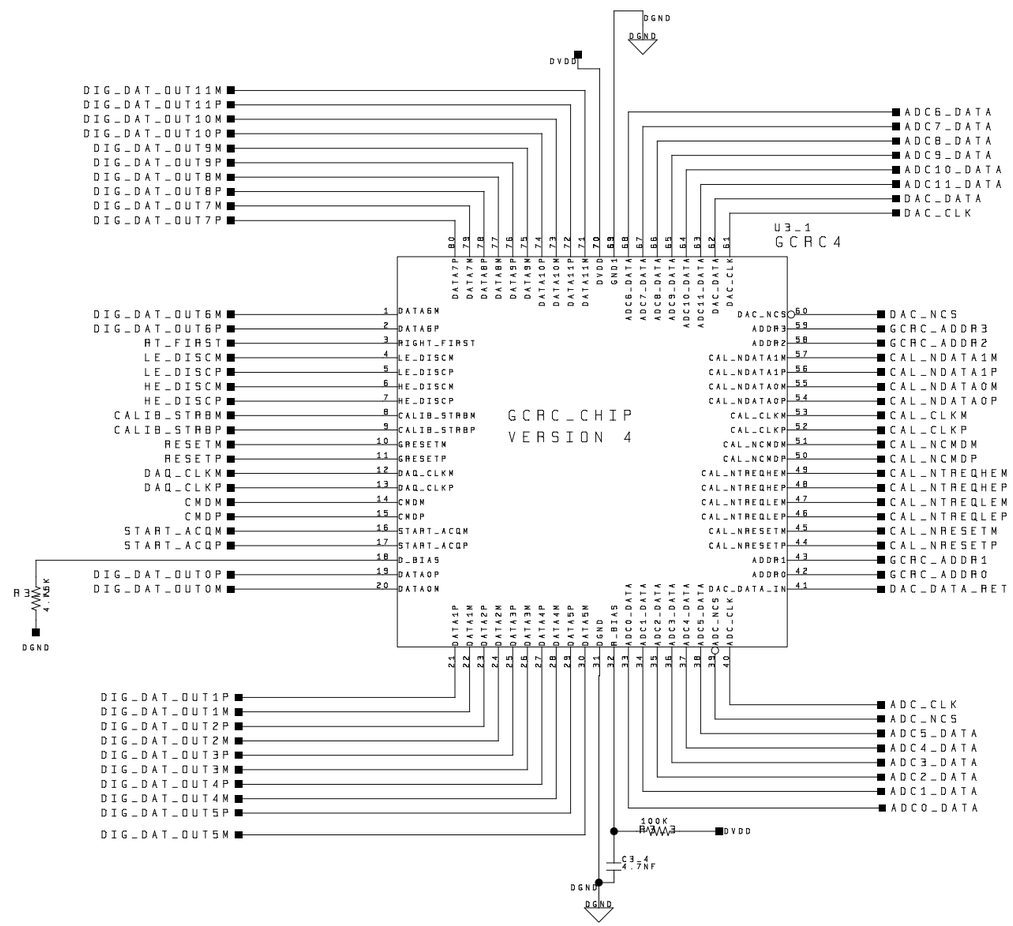

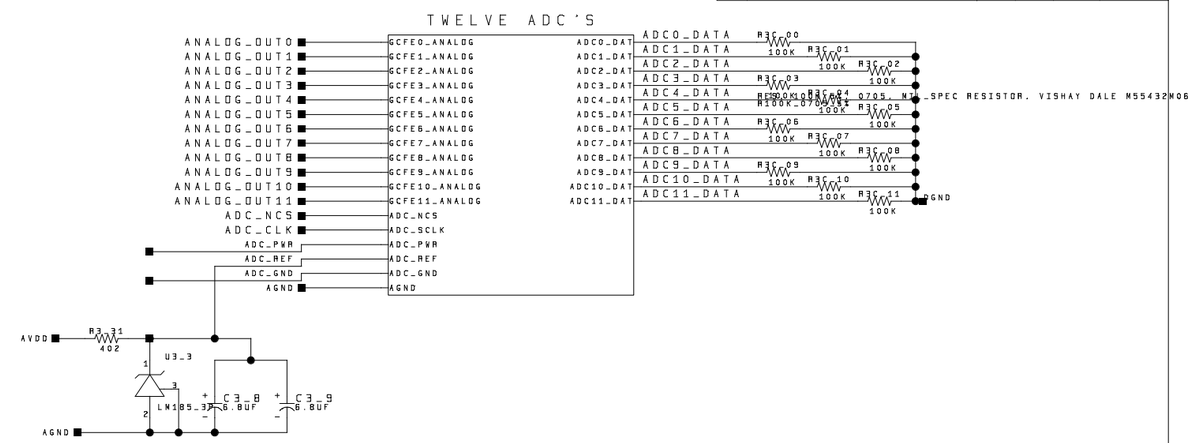

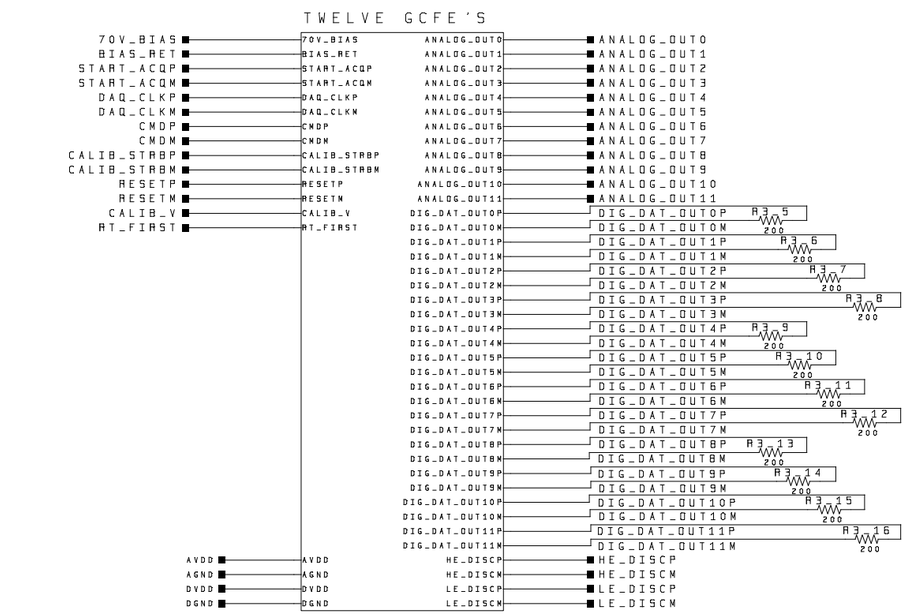

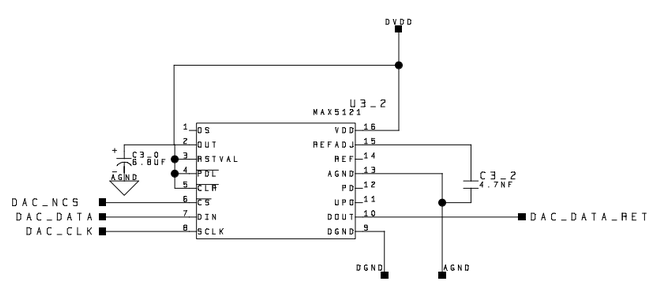

STANFORD LINEAR ACCELERATOR CENTER
U.S. DEPARTMENT OF ENERGY
STANFORD UNIVERSITY STANFORD, CALIFORNIA

PROPRIETARY DATA OF STANFORD UNIVERSITY AND/OR U.S. DEPARTMENT OF ENERGY. RECIPIENT SHALL NOT PUBLISH THE INFORMATION WITHIN UNLESS GRANTED SPECIFIC PERMISSION OF STANFORD UNIVERSITY.

	DATE	APPROVALS
ENGR		
DFTR		
CHKR		

SLAC - GLAST
AFEE X/Y BOARD
ONE ROW
AFEE X: LAT-DS-03342
AFEE Y: LAT-DS-03343

LAT-DS-03343/4-00 D