LAT-DS-00929-03	APPROVAL	DATE
CAL PROJECT MANAGER		7-11-03
CAL LEAD ENGINEER		7-10-03
CAL QA		7/10/03

RELEASED FOR MANUFACTURE
11 Jul 2003

MASTER DRAWING
GLAST-CAL CM FILE COPY

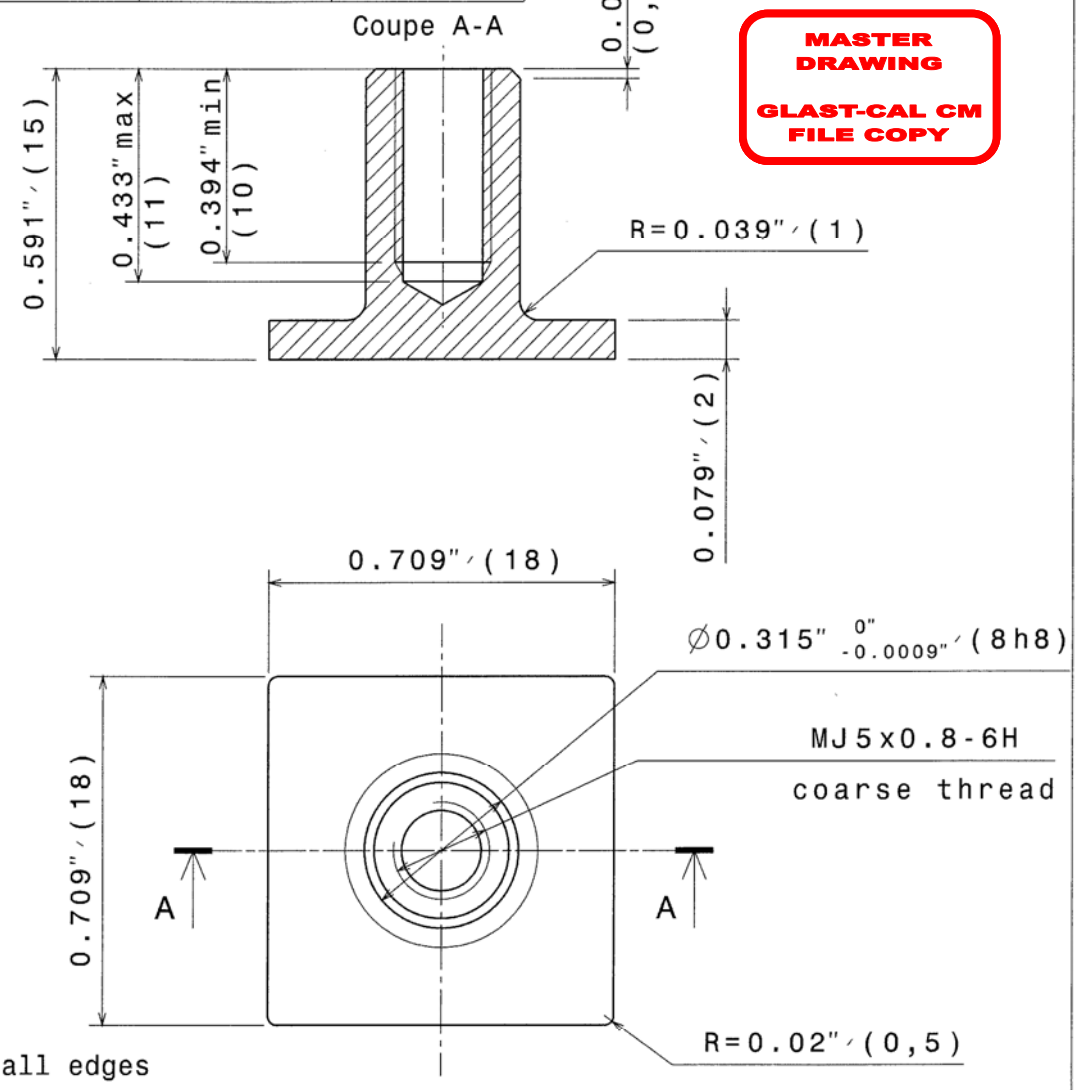

NOTA
Break all edges

Dimensions: inch (mm) Unless specified: Tolerances: ± 0.005 Surface finish: Ra 63 micro inch	A4 Scale: 3:1	Laboratoire Leprince-Ringuet ECOLE POLYTECHNIQUE 91128 PALAISEAU TEL: 01 69 33 31 87 FAX: 01 69 33 39 62 IN2P3
Material: Ti-6Al-4V	Quantity: 500	
Surface treatment: -		BASE INSERT
Drawing: Edy mai 2003 Checked: Ferreira Approuved: -		GLT-LLR-00-05 C A B

Fichier: