| REVISION | | | | |
|---|---|---|---|---|
| SYM | ZONE | DESCRIPTION | DATE | APPROVAL |
| | | | | |

## NOTES: UNLESS OTHERWISE SPECIFIED

1. FINISHED DIMENSIONS AFTER POLISHING
2. APPROXIMATE LOCATION OF V-MARK (FOR REFERENCE ONLY)
3. POLISH ALL SURFACES EXCEPT END FACES.
4. ROUGHEN AS NECESSARY TO ACHIEVE THE PROPER LIGHT TAPERING. CLEAN WITH DRY CLEAN AIR SUPPLIED BY KALMAR (CAN).
5. MAX AND MIN OF OPPOSING CHAMFER SURFACES.
6. VALUES ARE MAXIMUM DIMENSION.
7. END FACES SHOULD BE INSPECTED USING A 10X LOOP (WITH RETICLE HAVING A 0.1 mm RESOLUTION). ANY CRACKS ON THE EDGES GREATER THAN 0.1 mm ARE NOT ACCEPTABLE. MINOR SCRATCHES ON THE DIODE BONDING AREA ARE ACCEPTABLE.

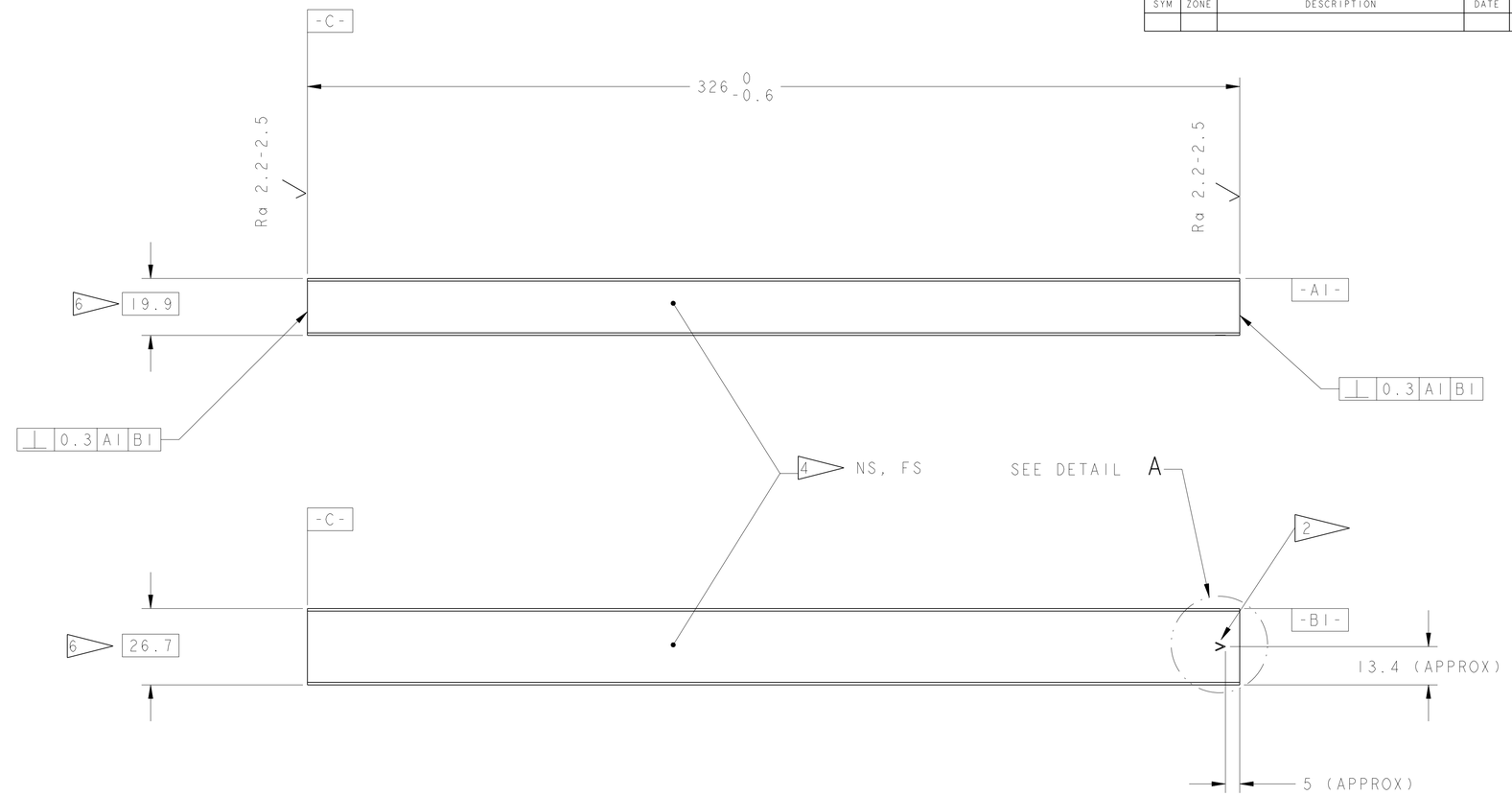


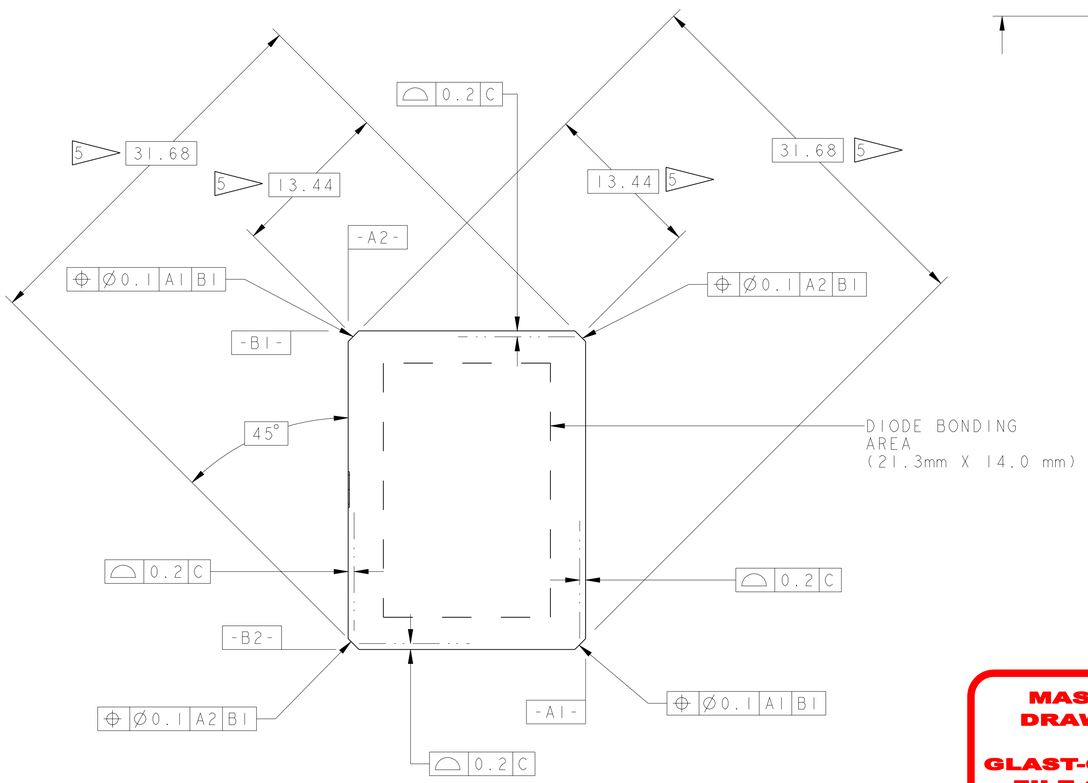


SCALE 4/1

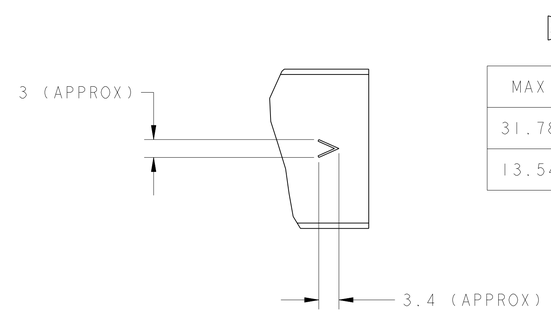


DETAIL A
SCALE 2/1
FOR REFERENCE ONLY

| MAX | MIN |
|---|---|
| 31.78 | 31.58 |
| 13.54 | 13.34 |

RELEASED FOR MANUFACTURE
20 Nov 2002

MASTER DRAWING
GLAST-CAL CM FILE COPY

| REQD | REQD | ITEM NO | PART NO. | DESCRIPTION | MATERIAL SPEC |
|---|---|---|---|---|---|
| | AR | — | — | CsI (Tl) CRYSTAL BAR | LAT-SS-00820 |

LIST OF MATERIAL

| NAME | INIT | DATE |
|---|---|---|
| DESIGNER - | | |
| DRAWN BY - | KW | 11-20-02 |
| CHECKED - | | |
| APPROVED-STRESS - | | |
| APPROVED-QA - | JL | 11-20-02 |
| APPROVED-ENGINEER - | PVD | 11-20-02 |
| APPROVED - | | |
| APPROVED - | | |

UNLESS OTHERWISE SPECIFIED: ALL DIMENSION ARE IN MILLIMETERS AND APPLY AFTER FINISH
DIMENSION TOLERANCES
0.X ±0.1 ANGLE±0.5°
X ±0.15
XX ±0.3
XXX ±0.8
XXXX ±1.5
0.2-0.4 ✓ FINISH IN MICROMETERS
INTERPRET DRAWING PER ANSI Y14.5M-1982
REMOVE ALL BURRS AND SHARP EDGES R0.25 OR CHAMFER MAX

MODEL NAME: LAT-DS-01115-01 -.2
DRW VERSION: -.2
PRO/ENGINEER VERSION: 2000i2

GLAST

TITLE
CsI CRYSTAL, CAL CDE FLIGHT

D | LAT-DS-01115 | REV 01

CAGE CODE | SCALE: 1/1 | WT APPROX: - | SH 1 OF 1

METRIC
HYBRID METRIC/INCH
THIRD ANGLE PROJECTION

CM CLASSIFICATION -

NEXT ASSY | USED ON

TASK NO: -